P3PC-7752-01ENZ2

RICOH

fi-8600/fi-8700/fi-8700S

Operator's Guide

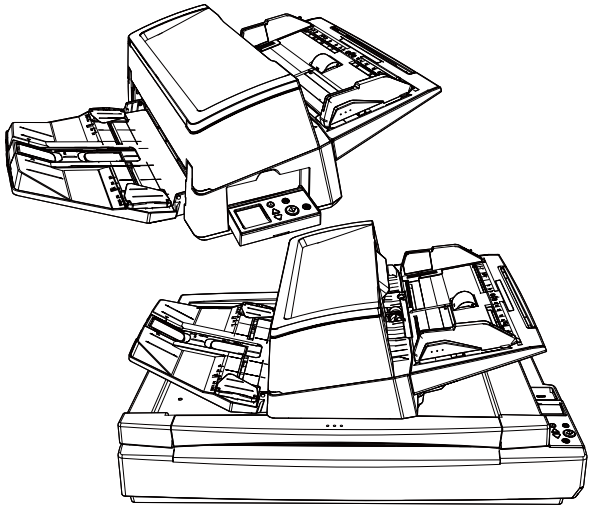

Contents

Introduction 10

About This Product 10
Manuals 11
Trademarks 14
Manufacturer 14
Issue Date/Issuer 14
Safety Information 14
Symbols Used in This Manual 15
Abbreviations Used in This Manual 16
Arrow Symbols in This Manual 17
Screen Examples in This Manual 17
Terms of Use 17
Returning/Disposing of/Transferring Ownership of the Scanner 17

Scanner Overview 19

What You Can Do with the Scanner 19
Connection Methods for the Scanner 21
Parts and Functions 22

Starting Scanner Setup 30

Overview of the Bundled Software 30
System Requirements 33
How to Install the Software (in an Online Environment) 34
How to Install the Software (in an Offline Environment) 37

How to Operate the Scanner 43

Turning the Power ON/OFF 43
How to Turn the Power ON 44
How to Turn the Power OFF 46
Entering and Resuming from Power Saving Mode 47
Opening/Closing the ADF 49
How to Open the ADF 49
How to Close the ADF 50

Opening/Closing the Document Cover [fi-8700/fi-8700S] **51**
How to Open the Document Cover 51
How to Close the Document Cover 52
Adjusting the Position of the ADF [fi-8700/fi-8700S] **53**
Setting Up the ADF Paper Chute (Feeder) **57**
Setting Up the Stacker **58**

How to Perform a Basic Scan 61

Starting a Scan from an Image Scanning Application **62**
Pressing a Button on the Scanner in order to Start an Image Scanning Application and Perform a Scan **64**
Configuring Button Settings in the Scanner Properties in Windows (for USB Connection) 69
Enabling the Desired Button Configuration **72**

How to Load Documents 73

Loading Documents in the ADF Paper Chute (Feeder) **73**
Preparing Documents to Load Them in the ADF Paper Chute (Feeder) 73
How to Load Documents in the ADF Paper Chute (Feeder) 75
How to Load Documents in the Center of the ADF Paper Chute (Feeder) 75
How to Load Documents Aligned to Either Side of the ADF Paper Chute (Feeder) 77
Placing a Document on the Flatbed [fi-8700/fi-8700S] **82**
Documents for Scanning **83**
Paper Size 83
Document Type 83
Paper Weight (Thickness) 83
Documents That May Not Be Scanned Successfully 84
Documents That Must Not Be Scanned 84
Notes on Documents and Plastic Cards 86
Loading Capacity 88
Area Not to Be Perforated 89
Loading Documents with Index Tabs or Non-rectangular Documents 90
Conditions Required to Accurately Detect Overlapped Documents (Multifeed) 91
Conditions for Mixed Batch Scanning 93
Conditions for Automatic Page Size Detection 97
Conditions for Using the Carrier Sheet 98

How to Use the Operator Panel 101

Operator Panel Overview **101**

Names and Functions of the Operator Panel 101
Indications on LCD 103
Names and Functions of the Indicator 106
How to Use the Settings Menu 109
Checking the Guidance Contents 113
Checking the Information 115
Checking the Scanner Information 117
Operational Settings for the Scanner 119
Checking and Clearing the Consumable Counters 121
Counting Documents 123
Configurable Items in the Settings Menu 125
How to Use Function Selection 134
Item Configurable in Function Selection 136

Various Ways to Scan Documents 137

Scanning Documents with Different Widths 137
Scanning Documents Folded in Half 140
Scanning Documents such as Envelopes or Multi-Layered Transfer Paper 144
Scanning Documents That Can Be Damaged Quite Easily without Damaging Them 146
Scanning Photographs and Clippings without Damaging Them 148
Scanning Long Page Documents 150
Feeding Documents Manually 151
Sorting the Images Scanned in Simplex Scanning Mode in the Same Order in Which the Images Scanned in Duplex Scanning Mode Are Arranged [fi-8700S] 153
Scanning Books with the Flatbed [fi-8700/fi-8700S] 155
Scanning Documents on the Flatbed with the Document Cover Open [fi-8700/fi-8700S] 156
Scanning Multiple Documents at Once on the Flatbed and Cropping Each Document as a Separate Image [fi-8700/fi-8700S] 158
Scanning Documents Automatically at Regular Intervals with the Flatbed [fi-8700/fi-8700S] 160
Configuring Not to Detect Certain Overlap Patterns 161
Operational Procedure 162
Disabling the Paper Protection Function 166
Operational Procedure 166

Daily Care 168

Cleaning Materials 168

Location and Frequency **170**
Cleaning the Outside of the Scanner **171**
Cleaning the Inside of the Scanner (ADF) with Cleaning Paper **173**
Cleaning the Inside of the Scanner (ADF) with a Cloth **175**
Cleaning the Inside of the Scanner (Flatbed) [fi-8700/fi-8700S] **182**
Cleaning the Carrier Sheet **184**

Replacing the Consumables 185

Consumables and Replacement Cycles **185**
Replacing the Brake Roller **187**
Replacing the Pick Roller **191**

Troubleshooting 199

When a Paper Jam Occurs **199**
Errors **201**
Imprinter Error (When the Imprinter Is Installed) [fi-8600] 206
Memory Error/LSI Error 206
Flatbed Carrier Error [fi-8700/fi-8700S] 207
Optical Error (Flatbed) [fi-8700/fi-8700S] 207
Optical Error (ADF) 208
Operator Panel Error 208
EEPROM Error 209
Image Memory Read-Write Error 209
Pick Arm Malfunction 210
Background Switching Mechanism Error 210
Motor Circuit Error 211
Imprinter System Error (When the Imprinter Is Installed) [fi-8600] 211
Lamp Circuit Error 212
Paper Damage Prevention 212
Paper Jam/Pick Error 213
Paper Jam (When the Imprinter Is Installed) [fi-8600] 213
Multifeed 214
Feed Mode Switched 214
Sensor(s) Dirty 214
Sensor Error 215
Wired LAN error 216
Network Setting Error 216
Transport Lock Error [fi-8700/fi-8700S] 217

ADF Open 217
Imprinter Cover Open (When the Imprinter Is Installed) [fi-8600] 218
Print Cartridge Not Installed (When the Imprinter Is Installed) [fi-8600] 218
Imprinting Area Error (When the Imprinter Is Installed) [fi-8600] 218
Being Used by Others 219
No Paper 219
Stop 219
Pause 219

Troubleshooting 220
The Scanner Cannot Be Powered ON 222
One or Both of the LCD and the [Power] Button Turn Off 223
Cannot Connect the Scanner and a Computer via the USB Cable 224
Cannot Connect the Scanner and a Computer via a Wired LAN 225
Scanning Does Not Start 229
Scanning Takes a Long Time 231
An Error (Error Code "U0:10", "U4:40" or "U5:4A") is Already Displayed in the LCD After Power-on 232
Overlapped Documents Are Frequently Fed into the Scanner 233
Situation in Which the Document Is not Fed into the ADF Occurs Frequently 236
Paper Damage Prevention Errors Occur Frequently 238
Paper Jams/Pick Errors Occur Frequently 240
The Scanned Image of a Picture or Photo is Rough/Image Noise Appears 242
Quality of Scanned Text or Lines Is Unsatisfactory 243
Images Are Distorted or Not Clear 245
Vertical Streaks Appear on the Images 247
Images Turn Out Elongated 249
A Shadow Appears at the Top or the Bottom of the Image 250
There Are Black Traces on the Document 251
The Carrier Sheet Is Not Fed Smoothly/Paper Jams Occur 252
Part of the Image Appears Missing in the Case Where the Carrier Sheet Is Used 254
Forgotten Admin Password 255
An Error Occurs When Entering the Default Administrator Password 255

Before You Contact the Scanner Service Provider 256
Actions to Take Before You Contact the Scanner Service Provider 256
Items to Check Before You Contact the Scanner Service Provider 256

Checking the Product Labels 258

Scanner Settings (Software Operation Panel) 260

Starting Up Software Operation Panel 260

Setting Software Operation Panel to [View Only mode] 262
Setting [View Only mode] 263

Exiting [View Only mode] 265
Setting a Password 267
Changing the Password 268
Clearing the Password 269
Resetting the Password 270

Setting Items 271
Device Setting 271
Device Setting 2 273

Settings Related to Sheet Counters 276
Checking the Sheet Counters 276
Clearing the Sheet Counters 279
Messages for Cleaning or Replacing Consumables 280
Scanner Cleaning Cycle [Cleaning Cycle] 281
Specifying the Cycle to Replace Consumables [Life Counter Alarm Setting] 282

Settings Related to Scanning 283
Adjusting the Starting Position for Scanning [Offset Setting/Vertical magnification Adjustment] 283
Removing Shadows/Streaks that Appear around Edges of Images [Page Edge Filler (ADF)/Page Edge Filler (FB) [fi-8700/fi-8700S]] 285
Configuring the Scan Setting to Drop Out Specified Colors When Scanning [Dropout Color] 288
Shortening the Scanning Intervals [Pre-Pick] 289
Specifying the Number of Retries for Paper Feeding [Number of paper feeding retries] 290
Setting the Timing at Which Document Feeding is Started [Pick Speed] 291
Settings for Image Sizes [AutoCrop Boundary] 292
Settings for the Paper Protection Function [Paper Protection] 293
Specifying the Sensitivity Level for Paper Protection [Paper Protection Sensitivity] 295
Settings for Scanning Documents with Index Tabs or Non-rectangular Documents [Automatic Page Size Detection (Page End)] 297
Adjusting the Paper Picking Pressure [Pick Pressure] 298
Preventing an Image from Missing Any Parts When Documents Are Fed Skewed [Overscan Control] 299
Scanning at High Altitude [High Altitude Mode] 301
Specifying the Image Quality for Scanning [Image Quality Mode] 302
Settings for the Paper Damage Prevention Function [Low-speed Feed Mode] 303
Specifying the Paper Ejecting Speed (Stacking Control) 304

Settings Related to the Detection for Overlapped Documents (Multifeed) 305
Specifying a Method to Detect Overlapped Documents [Multifeed] 305
Specifying the Area to Detect Overlapped Documents [Document check area specification for Multifeed Detection] 308
Setting to Ignore Certain Overlap Patterns [Intelligent Multifeed Function] 314

Settings Related to Waiting Time 316
Waiting Time for the Scanner to Enter Power Saving Mode [Power saving] 316

Waiting Time in Manual Feeding [Manual Feeding] 318

Settings Related to the Connection Between the Scanner and Computer 319

Specifying the USB Operation [USB] 319

Settings to Use the Scanner Only via the USB Connection [Network Function] 320

Settings Related to Power On/Off and the Power Consumption of the Scanner 321

Method for Turning the Scanner ON/OFF [Power Switch Control] 321

Settings Related to Scanner Maintenance 323

Detecting Vertical Streaks [Vertical Streak Detection] 323

Specifying the Sensitivity Level for Vertical Streak Detection [Vertical Streak Sensitivity] 324

Setting the Maintenance/Inspection Cycles for the Scanner [Maintenance and Inspection Cycle] 325

Network Settings (fi Series Network Settings) 326

Starting Up fi Series Network Settings 326

Setting Items 329

Scanner Information 331

Scanner Information 331

Network 332

Scanner name 332

Wired LAN 333

Security 335

Network Encryption 335

Maintenance 336

Admin Password 336

Export the Scanner Setting Information 337

Import the Scanner Setting Information 338

Restore Factory Defaults 339

License 340

Appendix 341

Basic Specification 341

Installation Specification 344

Outer Dimensions 346

Scanner Options 348

How to Check the Network Connection for the Scanner 349

Uninstalling the Software 350

Notes When Using IPv6 351

Notes When Exporting the Scanner Settings **352**

How to Start Network Setup Tool **353**

Starting Up Scanner Selection Tool 353

Starting Up IP Address Setting Tool 354

How to Start Button Event Manager 355

Notes on Repackaging [fi-8700/fi-8700S] **356**

Securing the Carrier Unit inside the Flatbed 356

Fixing the ADF 359

Installing the ADF Paper Chute (Feeder) and the Stacker 361

Contact for Inquiries **363**

Introduction

Thank you for purchasing this product.

About This Product

"This product" refers to the following three scanner models: fi-8600/fi-8700/fi-8700S
All models are equipped with an Automatic Document Feeder (ADF) that allows automatic document feeding, and can be connected via a USB cable or wired LAN.
In addition, some models are equipped with a flatbed.
Refer to the list below for the differences between each scanner model.

Model	Scanner type		Interface		Scanning Speed (*2)
	ADF	Flatbed (*1)	USB	Wired LAN	
fi-8600	○	—	○	○	● ADF Simplex 100 ppm, Duplex 200 ipm ● Flatbed None
fi-8700	○	○	○	○	● ADF Simplex 100 ppm, Duplex 200 ipm ● Flatbed 0.9 sec./sheet
fi-8700S	○ (*3)	○	○	○	● ADF Simplex 75 ppm ● Flatbed 0.9 sec./sheet

○: Equipped

—: Not equipped

***1:** Flatbed allows you to scan thin paper and thick documents such as a book.

***2:** For the ADF, this applies when A4 landscape documents are scanned at 200/300 dpi using JPEG compression.
For the flatbed, this applies when A4 portrait documents are scanned at 200/300 dpi using JPEG compression.

***3:** Only simplex scan is supported.

Manuals

The following manuals are included for this product.
Read them as needed.

Manual	Description
Safety Precautions (paper, PDF) (*1)	Contains important information about the safe use of this product. Make sure to read this manual before using the scanner.
Getting Started (paper)	Explains the items included in the package of the scanner, how to remove the materials used for protection, and how to prepare the scanner before using it.
Operator's Guide (this manual) (HTML) (*1)	Provides detailed information on how to set up the scanner, how to operate and maintain the scanner daily, how to replace the consumables, and how to troubleshoot problems.
fi-760PRB Imprinter Operator's Guide (PDF) (*1)	Provides detailed information on the basic operation, daily maintenance, consumable replacement, and troubleshooting of the fi-760PRB Imprinter that is available as an option for this product.
PaperStream Capture User's Guide (HTML)	Provides an overview of PaperStream Capture, as well as detailed information on installation, configuration, document scanning procedures, useful settings, and window items.
PaperStream IP Help	Explains how to use and configure the settings for the PaperStream IP driver.
Network Setup Tool Help	Explains how to use various tools for connecting the scanner to a network.
PaperStream ClickScan Help	Explains how to use and configure the settings for PaperStream ClickScan.
fi Series Online Update Help	Explains how to use and configure the settings for fi Series Online Update.

***1:**You can refer to the manuals after installing them during software installation.
For the software installation procedure, refer to the following:

- How to Install the Software (in an Online Environment) (page 34)
- How to Install the Software (in an Offline Environment) (page 37)

To view the installed manuals, perform the following:

- For Windows 10/Windows Server 2016/Windows Server 2019/Windows Server 2022

Click [Start] menu → [fi Series] → [Safety Precautions - fi-8600 fi-8700 fi-8700S], [Operator's Guide - fi-8600 fi-8700 fi-8700S], or [Imprinter Operator's Guide - fi-8600 fi-8700 fi-8700S].

- For Windows 11/Windows Server 2025
  Click [Start] menu → [All Apps] → [fi Series] → [Safety Precautions - fi-8600 fi-8700 fi-8700S], [Operator's Guide - fi-8600 fi-8700 fi-8700S], or [Imprinter Operator's Guide - fi-8600 fi-8700 fi-8700S].

Depending on the software that you want to use, refer to the manual for that software in addition to the manuals above.
For details about the software, refer to Overview of the Bundled Software (page 30).

- **Manuals to refer to when setting up the scanner**

Action		Refer to
From unpacking to the preparation before use		Getting Started
Scanner Setup	Checking connection methods	Operator's Guide ● Connection Methods for the Scanner (page 21) ● Network Settings (fi Series Network Settings) (page 326)
	Installing the software/ Setting a connection method	● Operator's Guide - Starting Scanner Setup (page 30) ● Network Setup Tool Help
Structuring servers	Configuring preferences for DNS servers (when searching for a scanner or computer with its host name)	Manual for the DNS servers that are used
	From Installation to Operation of PaperStream Central Admin (when using PaperStream Central Admin)	PaperStream Central Admin User's Guide
Scanning	Scanning procedure	Operator's Guide ● Starting a Scan from an Image Scanning Application (page 62) ● Pressing a Button on the Scanner in order to Start an Image Scanning Application and Perform a Scan (page 64)
	Scan settings	● Help for the scanner driver

Action		Refer to
		• Manual/Help for the image scanning application
Operational settings for the scanner		Operator's Guide • Scanner Settings (Software Operation Panel) (page 260)

Trademarks

ISIS is a trademark of Open Text.
Intel and Intel Core are trademarks of Intel Corporation or its subsidiaries in the U.S. and/or other countries.
Google and Google Chrome are trademarks or registered trademarks of Google LLC.
Besides the software authored by the product developer (PFU Limited), this product contains open source software created by third parties. For details concerning the conditions of the licenses for the open source software, refer to the window that appears by clicking [License] in the menu for fi Series Network Settings.
Microsoft, Internet Explorer, Windows, and Windows Server are trademarks of the Microsoft group of companies.
PaperStream is a registered trademark of PFU Limited in Japan.
Other company names and product names are the registered trademarks or trademarks of the respective companies.

Manufacturer

PFU Limited
YOKOHAMA i-MARK PLACE, 4-5 Minatomirai 4-chome, Nishi-ku, Yokohama-shi, Kanagawa 220-8567 Japan.

Issue Date/Issuer

Issue date: August 2026
Issued by: PFU Limited
Regulatory Model: P3890A/P3890C/P3890E/P3890L/P3890M/P3890N
© PFU Limited 2026

Safety Information

The attached "Safety Precautions" manual contains important information about the safe and correct use of this product.
Make sure that you read and understand it before using the scanner.

Symbols Used in This Manual

The following indications are used in this manual to obviate any chance of accident or damage to you, people near you, and your property.
Warning labels consist of a symbol indicating the severity and a warning statement.
The symbols and their meanings are as follows.

	This indication alerts operators of an operation that, if not strictly observed, may result in severe injury or death.

	This indication alerts operators of an operation that, if not strictly observed, may result in safety hazards to personnel or damage to the product.

For notational convention, the following symbols are used in this manual:

ATTENTION

This symbol alerts operators to particularly important information. Be sure to read this information.

TIP

This symbol alerts operators to helpful advice regarding operations.

Abbreviations Used in This Manual

The following abbreviations are used in this manual.

Name	Indication
Windows® 10 Home (32-bit/64-bit) Windows® 10 Pro (32-bit/64-bit) Windows® 10 Enterprise (32-bit/64-bit) Windows® 10 Education (32-bit/64-bit)	Windows 10 (*1)
Windows® 11 Home (64-bit) Windows® 11 Pro (64-bit) Windows® 11 Enterprise (64-bit) Windows® 11 Education (64-bit)	Windows 11 (*1)
Windows Server® 2016 Standard (64-bit)	Windows Server 2016 (*1)
Windows Server® 2019 Standard (64-bit)	Windows Server 2019 (*1)
Windows Server® 2022 Standard (64-bit)	Windows Server 2022 (*1)
Windows Server® 2025 Standard (64-bit)	Windows Server 2025 (*1)
Internet Explorer®	Internet Explorer
Google Chrome™	Google Chrome
PaperStream IP (TWAIN) PaperStream IP (TWAIN x64) PaperStream IP (ISIS) fi-8000 Series	PaperStream IP driver

***1:**Where there is no distinction between the different versions of the above operating system, the general term "Windows" is used.

Arrow Symbols in This Manual

Right-arrow symbols (→) are used to separate icons or menu options which should be selected in succession.

Example: Click [Start] menu → [Control Panel].

Screen Examples in This Manual

Microsoft product screenshots are reprinted with permission from Microsoft Corporation.
The screen examples in this manual are subject to change without notice in the interest of product development.
If the actual displayed screen differs from the screen examples in this manual, operate by following the actual displayed screen while referring to the user's manual of the scanner application that you are using.
The screenshots used in this manual are of Windows 11. The actual windows and operations may differ depending on the operating system. Also note that the screens and operations may differ from this manual after the scanner application software is updated. In that case, refer to the manual provided upon updating the software.

Terms of Use

Make sure you read the following terms of use before using this manual:

- To use all the functions described in this manual, update the software and firmware related to the fi Series to the latest version.
- This manual is provided for customers who have purchased or installed our product. Note that we cannot guarantee to reply to inquiries asked about this manual from customers who have not purchased or installed this product.
- Note that the contents of this manual may be updated, or the service may be stopped, without notice in the interest of product development.
- PFU Limited assumes no liability for loss or damage arising from the use of this manual or the unavailability of this manual.
- PFU Limited assumes no liability for incidental or consequential damages arising from the use of this product, and any claims by a third party.
- Copying of the contents of this manual, in whole or in part, as well as the scanner applications is prohibited under the copyright law.

Returning/Disposing of/Transferring Ownership of the Scanner

The scanner may store various settings including user names or email addresses.
If you return, dispose of, or transfer ownership of the scanner, delete the information stored on the scanner by yourself.

For details about how to delete this information, refer to the following:

- fi Series Network Settings (browser)
  - Restore Factory Defaults (page 339)

Scanner Overview

This section provides an overview of the scanner before use.

What You Can Do with the Scanner

- **Scanner Connections**
  - Connecting the scanner to a computer using a USB cable or a LAN cable
    ➡ Connection Methods for the Scanner (page 21)
- **Scanning Methods**
  - Starting a scan from the computer
    ➡ Starting a Scan from an Image Scanning Application (page 62)
  - Starting a scan using a button on the scanner
    ➡ Pressing a Button on the Scanner in order to Start an Image Scanning Application and Perform a Scan (page 64)
- **Scanning Methods for Various Documents**
  - Scanning documents that are difficult to scan (such as documents folded in half, envelopes, or multi-layered transfer paper)
    ➡ Documents for Scanning (page 83)
    ➡ Scanning Documents with Different Widths (page 137)
    ➡ Scanning Documents such as Envelopes or Multi-Layered Transfer Paper (page 144)
  - Scanning documents of different paper weights, sizes, and types at once
    ➡ Conditions for Mixed Batch Scanning (page 93)
    ➡ Scanning Documents with Different Widths (page 137)
  - Scanning large-size documents
    ➡ Scanning Documents That Can Be Damaged Quite Easily without Damaging Them (page 146)
    ➡ Scanning Long Page Documents (page 150)
  - Scanning important documents, photographs, or clippings while protecting them from damage
    ➡ Scanning Documents That Can Be Damaged Quite Easily without Damaging Them (page 146)
    ➡ Scanning Photographs and Clippings without Damaging Them (page 148)
    ➡ Conditions for Using the Carrier Sheet (page 98)
  - Manually loading and scanning one sheet at a time
    ➡ Feeding Documents Manually (page 151)
  - Scanning a book
    ➡ Scanning Books with the Flatbed [fi-8700/fi-8700S] (page 155)

- Scanning with the document cover left open

  ➡ Scanning Documents on the Flatbed with the Document Cover Open [fi-8700/fi-8700S] (page 156)

- Scanning multiple documents on the flatbed and cropping each document as a separate image

  ➡ Scanning Multiple Documents at Once on the Flatbed and Cropping Each Document as a Separate Image [fi-8700/fi-8700S] (page 158)

- Scanning a book while turning the pages

  ➡ Scanning Documents Automatically at Regular Intervals with the Flatbed [fi-8700/fi-8700S] (page 160)

- Scanning documents with sticky notes, receipts, or photos attached in fixed positions without treating them as errors

  ➡ Configuring Not to Detect Certain Overlap Patterns (page 161)

- **Centralized Management of Multiple Scanners**

  - With PaperStream Central Admin Agent, you can manage scanners in PaperStream Central Admin
    For details, refer to the PaperStream Central Admin User's Guide.

Connection Methods for the Scanner

- **Connecting the Scanner via a USB Cable**

  Connect the scanner to the computer using a USB cable.

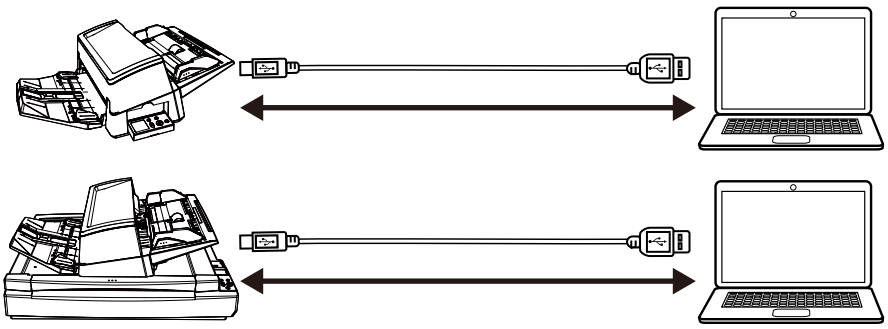

  You can scan documents in the following ways.

  - Using a computer to perform a scan

    ➡ Starting a Scan from an Image Scanning Application (page 62)

  - Using the scanner buttons to perform a scan

    ➡ Pressing a Button on the Scanner in order to Start an Image Scanning Application and Perform a Scan (page 64)

- **Connecting the Scanner via a Wired LAN**

  Connect the scanner to a network device (such as a switch, a hub, or a router) via a LAN cable. When the scanner is connected to a computer, it can be used from computers on the same network.

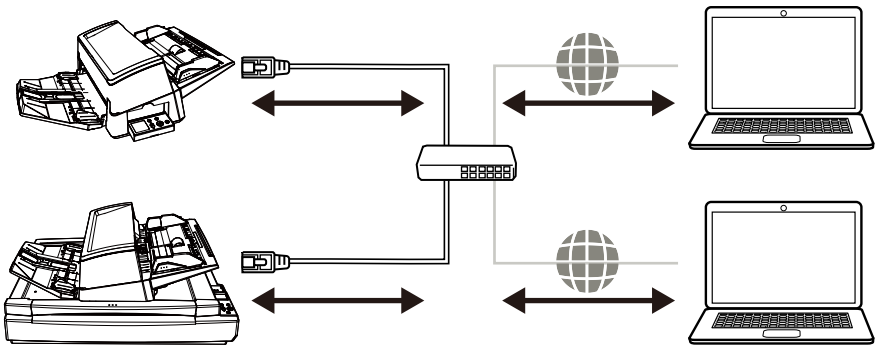

  You can scan documents in the following ways.

  - Using a computer to perform a scan

    ➡ Starting a Scan from an Image Scanning Application (page 62)

  - Using the scanner buttons to perform a scan

    ➡ Pressing a Button on the Scanner in order to Start an Image Scanning Application and Perform a Scan (page 64)

Parts and Functions

This section shows the names of the scanner parts.

- **Front**
  - fi-8600

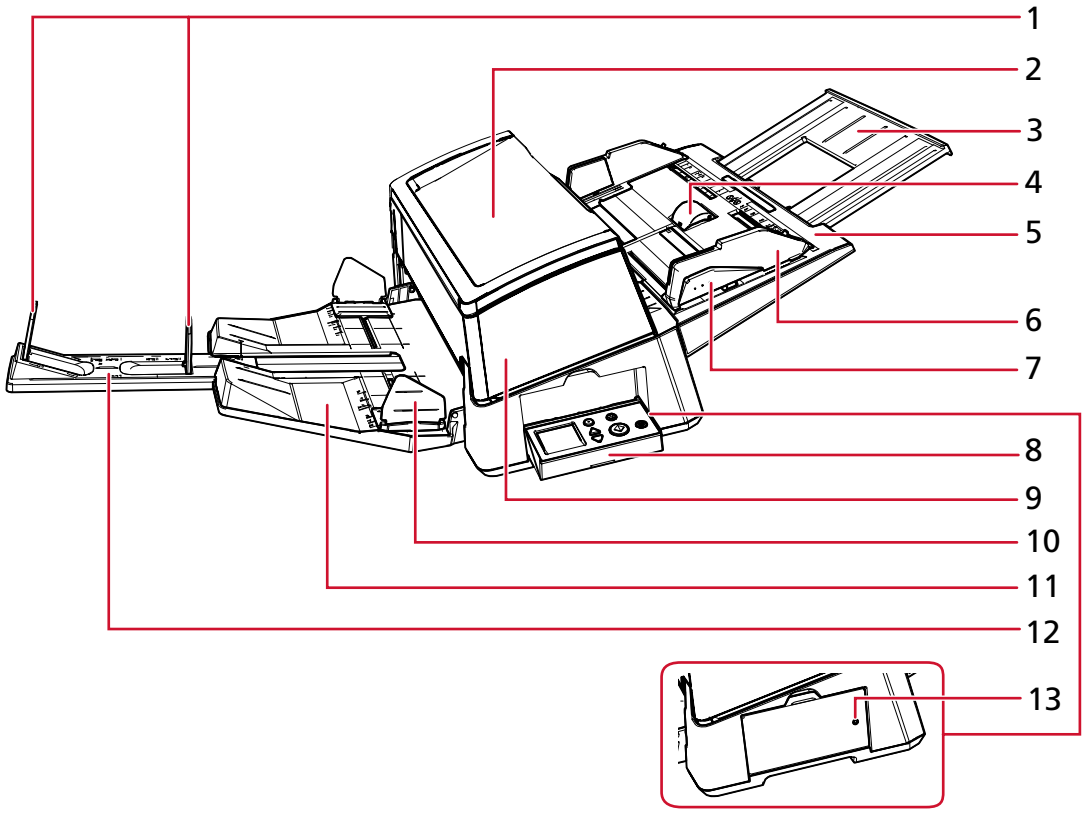

- fi-8700/fi-8700S

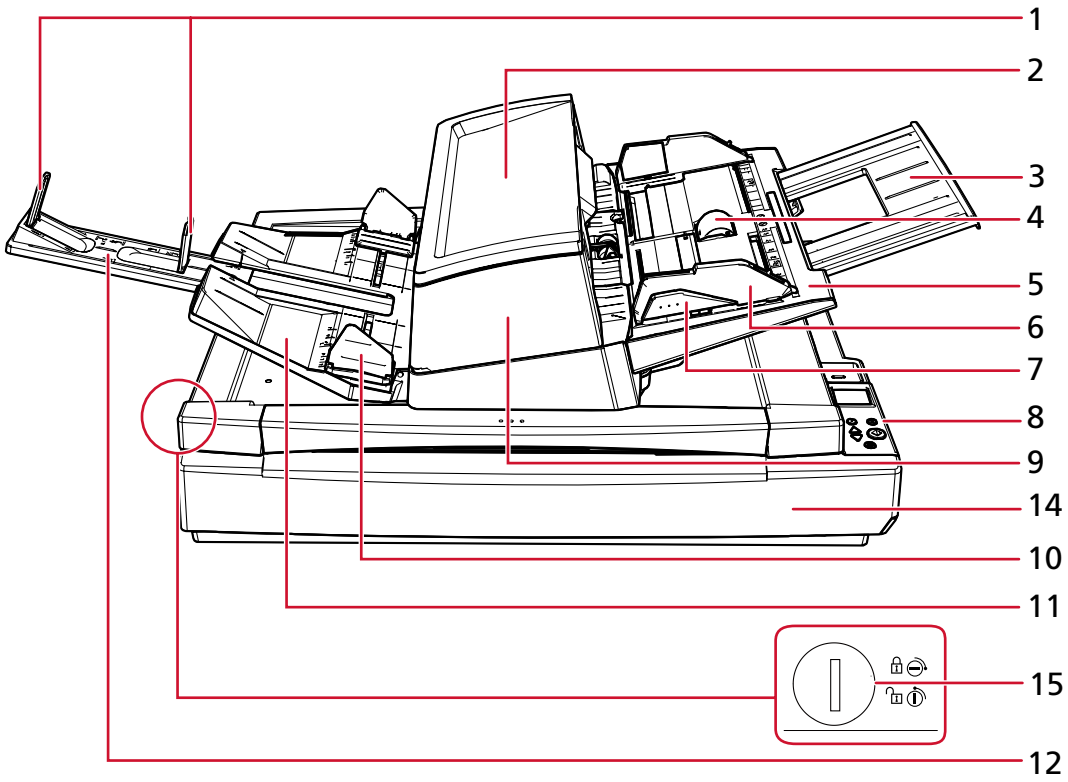

No.	Name	Function
1	Stopper	Lift up to adjust to the document length.
2	Subtray	Allows you to temporarily place documents to be scanned.
3	Chute extension	Pull out to adjust to the document length.
4	Chute roller cover	Prevents your fingers from getting caught in the chute roller.
5	ADF paper chute (feeder)	Holds the documents to be scanned.
6	Side guide	Adjusts the horizontal position of documents according to the width of the documents loaded in the ADF paper chute (feeder). Prevents documents from skewing during feeding.
7	Side guide button	Press and hold this button to unlock the side guide for adjusting the position. The side guide is locked when the button is released.
8	Operator Panel	It consists of an LCD and buttons. Used to operate the scanner or check the status.

No.	Name	Function
		The scanner has an operator panel on each side, allowing operation from either side. The operator panel can be fitted into the side of the scanner when it is not used. ➔ How to Use the Operator Panel (page 101)
9	ADF (Automatic Document Feeder)	Pulls and feeds the documents one sheet at a time from the ADF paper chute (feeder). Open this to replace consumables or to clean the inside of the scanner.
10	Stacker side guide	Guides the ejected documents in the width direction to prevent them from being scattered.
11	Stacker	Stacks up the ejected documents. You can set the height to either the high or low position.
12	Stacker extension	Pull out to adjust to the document length.
13	Status indicator (LED)	Allows you to check whether the scanner is on even when the operator panel is fitted into the side. Lights in green when the scanner is on. Turns off when the scanner is off.
14	Flatbed	Place documents on the document bed when scanning thin documents or thick documents (such as books) that cannot be scanned with the ADF.
15	Transport lock switch	Locks or unlocks the transport lock. Locking the transport lock secures the carrier unit inside the flatbed so that the flatbed is not damaged during transport. To lock the transport lock, use a coin or similar tool to turn the transport lock switch until the slot is in the horizontal position. Unlocking the transport lock allows you to scan documents on the flatbed. To unlock the transport lock, use a coin or similar tool to turn the transport lock switch until the slot is in the vertical position.

- **Back**
  - fi-8600

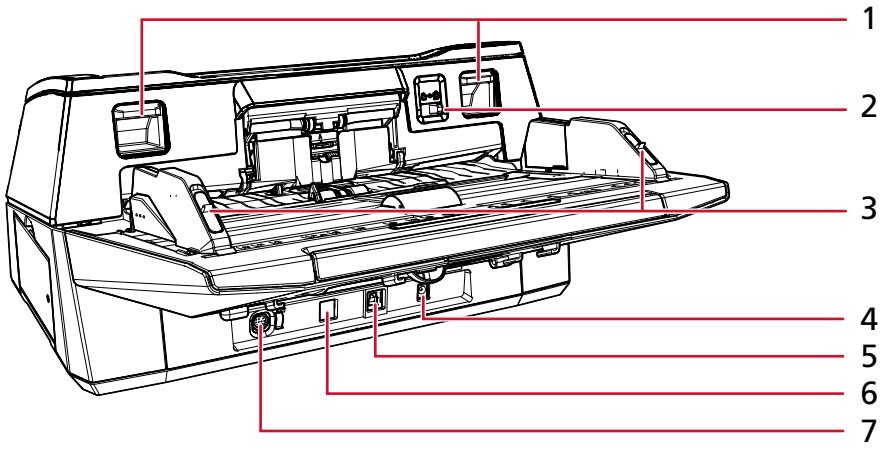

  - fi-8700/fi-8700S

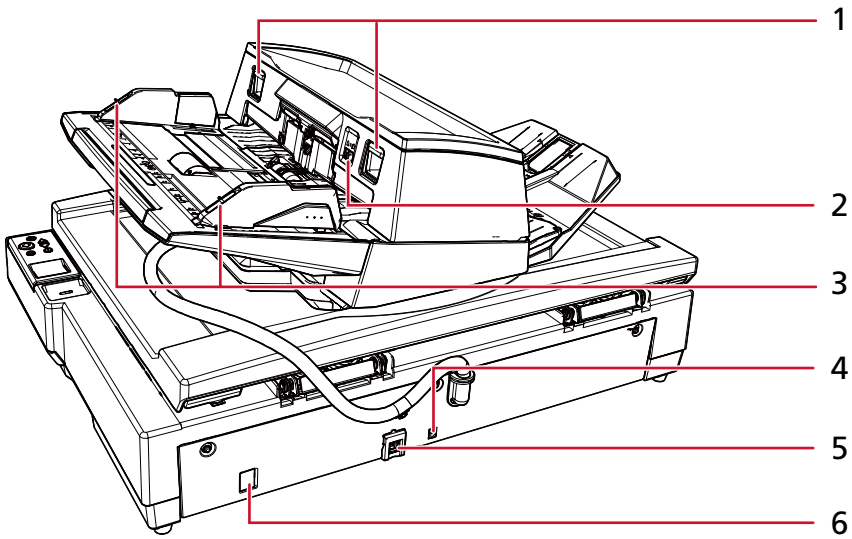

No.	Name	Function
1	ADF release tab	Lift up these tabs to unlock and open the ADF.
2	Feed mode switch	Slide the feed mode switch to the left to switch the feed mode to Manual Single Mode.
3	Side guide lock	Lock the side guides.
4	Power connector	Used to connect a power cable. "Power cable" refers to the AC cable and AC adapter connected together.
5	USB connector	Used to connect the USB cable.

No.	Name	Function
6	LAN connector	Used to connect a LAN cable.
7	EXT connector	Used to connect the imprinter. The imprinter is available as an optional imprinter (sold separately) that can print text (e.g. alphabets, numbers) on a document after scanning. It can be used to organize your documents by printing a name, date or serial number on the scanned document. ➔ Scanner Options (page 348)

- **Inside (ADF)**

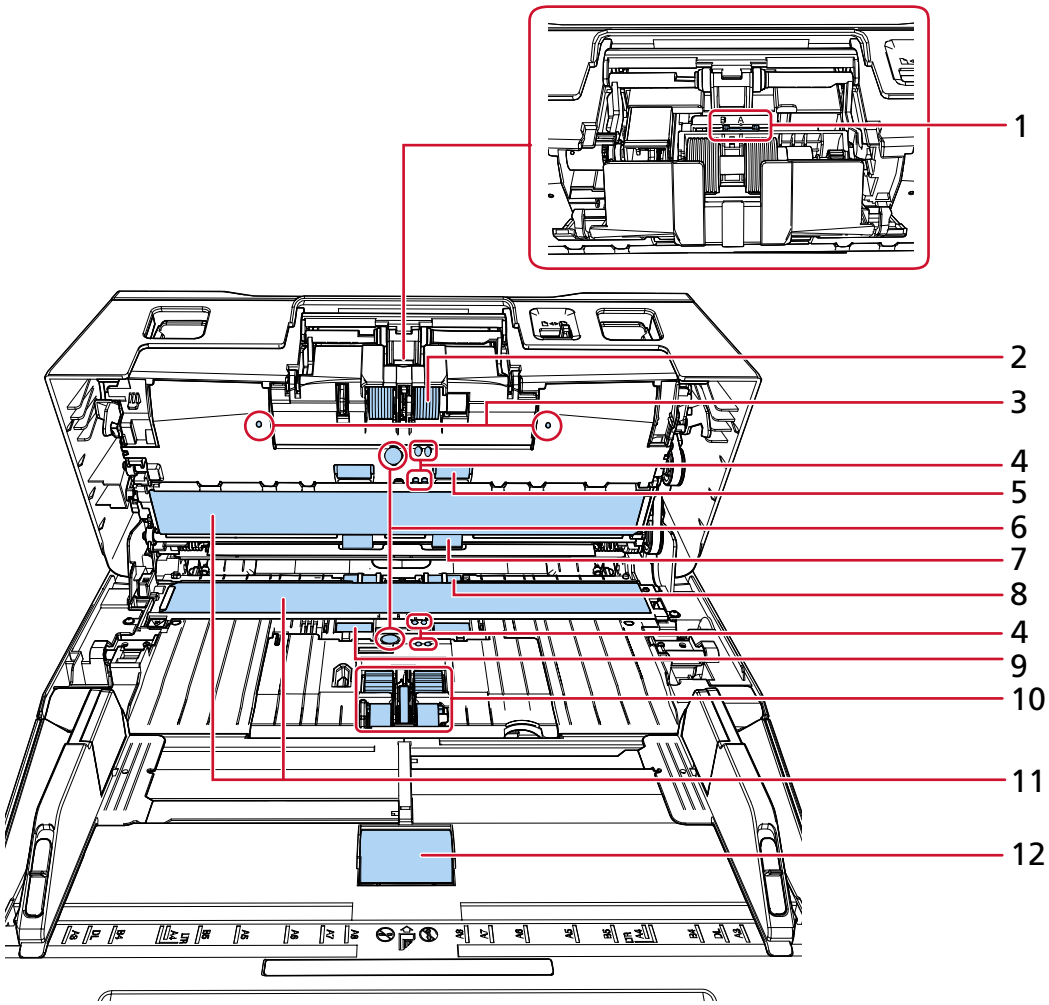

No.	Name	Function
1	Separation level switch (× 1)	This switch is set to "A" as the factory default.

No.	Name	Function
2	Brake roller (× 2)	A roller that prevents more than one sheet of documents to be fed into the ADF at once.
3	Microphone (× 2)	Detects paper jam noises.
4	Document sensor (× 8)	A sensor which detects whether there is a document.
5	Feed roller (× 2)	A roller which feeds documents through the ADF.
6	Ultrasonic sensor (× 2)	A sensor that detects overlapped documents by ultrasonic soundwave. It detects overlapped documents by monitoring the difference in the amount of ultrasonic waves transmitted through the documents.
7	Eject roller (× 2)	A roller which feeds documents from the ADF onto the stacker.
8	Plastic roller (× 2)	A roller which feeds documents from the ADF onto the stacker.
9	Rubber roller (× 2)	A roller which feeds documents through the ADF.
10	Pick roller (× 5)	A set of rollers which separates one sheet off the documents loaded in the ADF paper chute (feeder), and feeds the document into the ADF.
11	Glass (× 2)	The surface which scans documents.
12	Chute roller (× 1)	A roller which feeds documents loaded on the ADF paper chute (feeder).

- **Inside (Flatbed) [fi-8700/fi-8700S]**

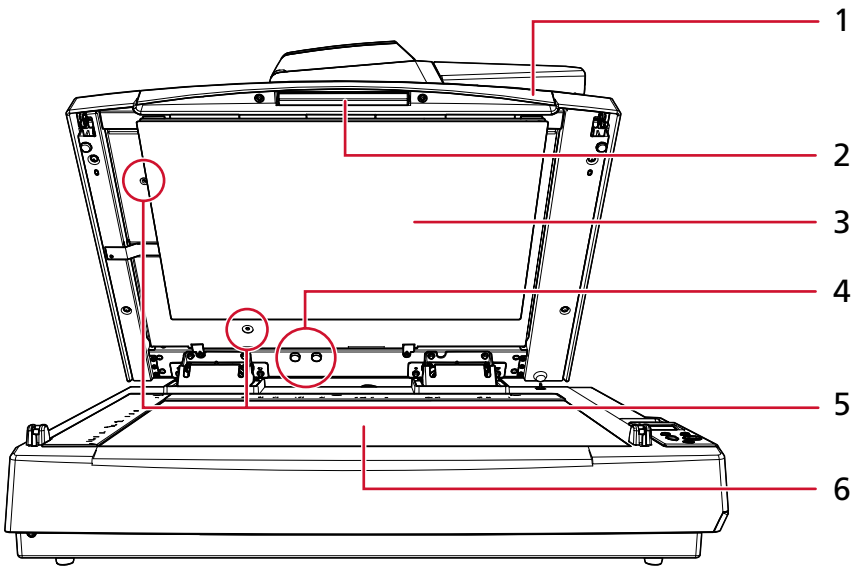

No.	Name	Function
1	Document cover	Close it to hold the document in place.
2	Handle	Used to open and close the document cover.
3	Document pad	Holds the document down against the document bed. A black document pad is available as an option (sold separately). Used to perform scanning in black background. ➔ Scanner Options (page 348)
4	Lock screw storage hole	Store the ADF lock screws that were removed after the ADF has been unlocked.
5	ADF lock screw	Fix the ADF.
6	Document bed	Place a document on the glass section. ➔ Placing a Document on the Flatbed [fi-8700/fi-8700S] (page 82)

- **Removable Parts**

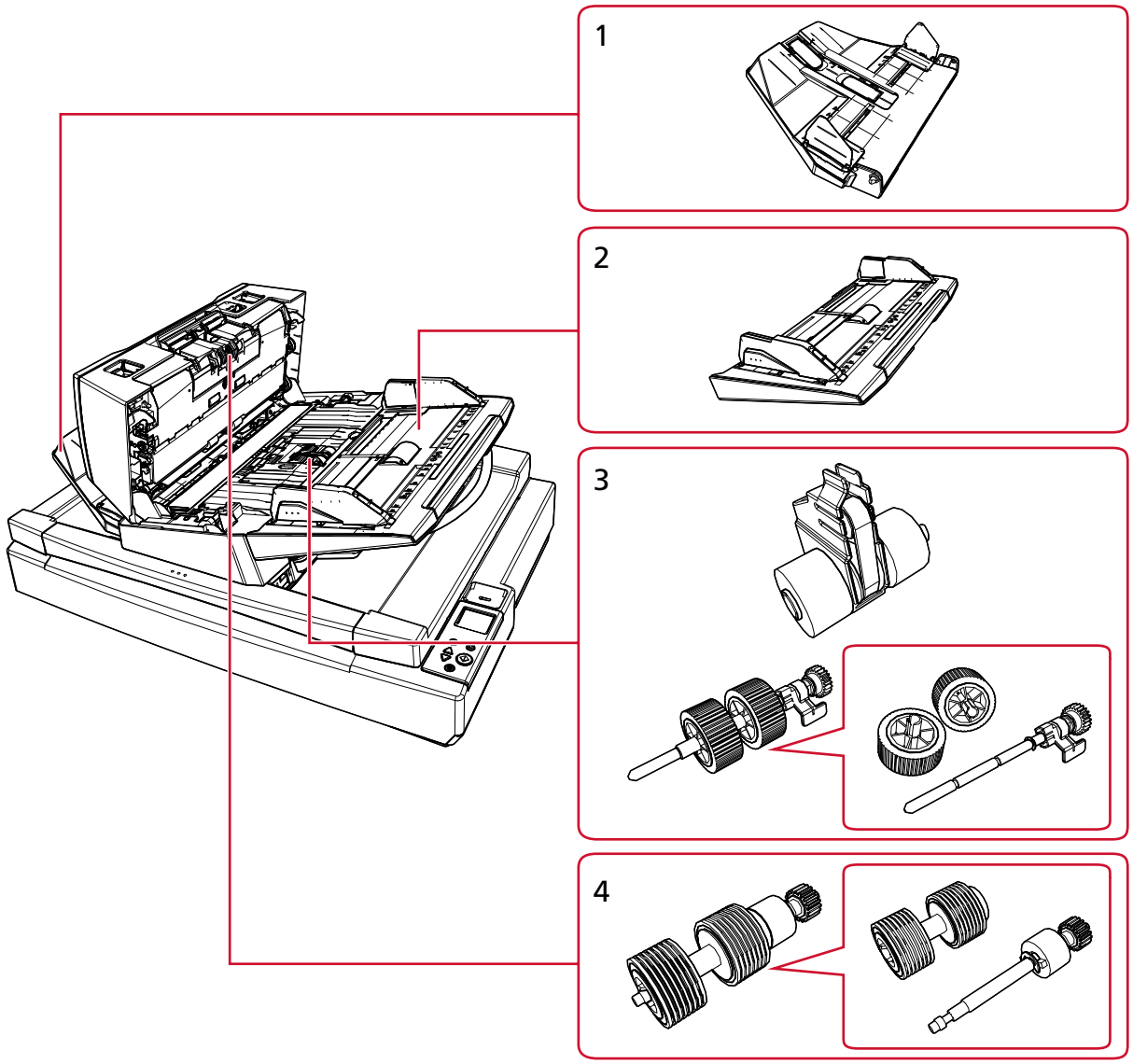

No.	Name	Function
1	Stacker	Stacks up the ejected documents. You can set the height to either the high or low position.
2	ADF paper chute (feeder)	Holds the documents to be scanned.
3	Pick roller	A set of rollers which separates one sheet off the documents loaded in the ADF paper chute (feeder), and feeds the document into the ADF.
4	Brake roller	A roller that prevents more than one sheet of documents to be fed into the ADF at once.

Starting Scanner Setup

This section explains how to set up the scanner.
To use the scanner, obtain the installer from the download website and perform the following setup.

- Installing the software
  Install necessary software to the computer which is to be connected to the scanner.

  ➡ How to Install the Software (in an Online Environment) (page 34)

  ➡ How to Install the Software (in an Offline Environment) (page 37)

- Connecting the scanner
  Connect the scanner to a computer using a USB cable or a wired LAN.
  For details, refer to the Network Setup Tool Help.
  For details about the connection types of the scanner, refer to Connection Methods for the Scanner (page 21).

Then, if necessary, configure the following settings:

- Operational settings for the scanner

  ➡ Scanner Settings (Software Operation Panel) (page 260)

- Network settings for the scanner

  ➡ Network Settings (fi Series Network Settings) (page 326)

Overview of the Bundled Software

This section describes the software that is required for the computer you want to connect the scanner to.
Obtain the installer from the download website, and then either install all software at once or install only the necessary software individually.

> **TIP**
> When you use PaperStream Central Admin, install it separately from the download website. For details, refer to the PaperStream Central Admin User's Guide.

- PaperStream IP driver
  The PaperStream IP driver is a scanner driver that conforms to the TWAIN/ISIS standard. It supports scanners connected to a network.
  There are three types of PaperStream IP drivers.

  - PaperStream IP (TWAIN)
    Conforms to the TWAIN standard. Used when you operate the scanner using TWAIN-compliant 32-bit applications.
  - PaperStream IP (TWAIN x64)
    Conforms to the TWAIN standard. Used when you operate the scanner using TWAIN-compliant 64-bit applications.

Regardless of your operating system, if the image scanning application that you are using is a 32-bit application, use PaperStream IP (TWAIN).

- PaperStream IP (ISIS) fi-8000 Series
  Conforms to the ISIS standard. Used when you operate the scanner using ISIS-compliant applications.

For details, refer to the PaperStream IP driver Help.

- Network Setup Tool
  The following applications are included.
  These applications are required to connect the scanner to a network and make it available for use.
  - Scanner Selection Tool
    Use this application to set a computer to be able to use the scanner connected to a network.
  - IP Address Setting Tool
    Use this application to configure the scanner's IP address and scanner name.
  - Button Event Manager
    Use this application to configure the settings for an image scanning application that is started by pressing the button on the scanner when it is connected to a network.

  For details, refer to the Network Setup Tool Help.
- Software Operation Panel
  You can configure settings that are related to scanning documents and managing consumable parts.
  It is installed together with the PaperStream IP driver.
  ➡ Scanner Settings (Software Operation Panel) (page 260)
- Error Recovery Guide
  Use this application to display the status of the scanner and a solution for a problem if an error occurs in the scanner.
  It is installed together with the PaperStream IP driver.
  Solutions for problems can also be checked in Troubleshooting (page 199).
- Error Recovery Guide (manual)
  This is a manual which describes solutions for errors notified by Error Recovery Guide.
- PaperStream ClickScan
  A 32-bit image scanning application which supports PaperStream IP (TWAIN).
  Scanning can be performed via simple settings and operations.
  This program starts automatically when you log in to your computer and resides in the notification area of the taskbar.
  For details, refer to the PaperStream ClickScan Help.
- PaperStream Capture
  A 32-bit image scanning application which supports PaperStream IP (TWAIN)/PaperStream IP (ISIS) fi-8000 Series.
  By defining scan settings as jobs, you can customize the settings according to your preference.

PaperStream Capture has paid versions, namely PaperStream Capture Pro and PaperStream Capture Pro Premium. An evaluation version is available to experience the features of PaperStream Capture Pro Premium.
For details, refer to the PaperStream Capture User's Guide.

- Manuals
  Safety Precautions, the Operator's Guide, and the fi-760PRB Imprinter Operator's Guide are installed.
- fi Series Online Update
  This is an application that checks for and installs the latest updates for the following programs.
  - Software installed on the computer
  - Firmware of the scanner connected to the computer

  For details, refer to the fi Series Online Update Help.

System Requirements

The system requirements for the computer on which software is to be installed are as follows.

Operating system	● Windows® 10 Home (32-bit/64-bit) (*1) ● Windows® 10 Pro (32-bit/64-bit) (*1) ● Windows® 10 Enterprise (32-bit/64-bit) (*1) ● Windows® 10 Education (32-bit/64-bit) (*1) ● Windows® 11 Home (64-bit) (*1) ● Windows® 11 Pro (64-bit) (*1) ● Windows® 11 Enterprise (64-bit) (*1) ● Windows® 11 Education (64-bit) (*1) ● Windows Server® 2016 Standard (64-bit) (*1) ● Windows Server® 2019 Standard (64-bit) (*1) ● Windows Server® 2022 Standard (64-bit) (*1) ● Windows Server® 2025 Standard (64-bit) (*1)
CPU	Intel or Intel-compatible processor
Display resolution	1024 × 768 pixels or higher, 65,536 or more colors (*2)
Disk space	12 GB or more of free disk space (*3)
Interface	USB3.2 Gen 1x1/USB3.0/USB2.0/USB1.1
Browsers (*4)	● Google Chrome ● Microsoft Edge

***1:**The bundled software operates as a desktop application.

***2:**When using fi Series Network Settings, use a display capable of displaying at least 1280 × 768 pixels or higher.
When using PaperStream Capture, use a display capable of displaying at least 1280 × 800 pixels or higher and 65,536 or more colors.

***3:**Required disk space for scanning documents varies according to the file size of the scanned images.

***4:**One of the browsers is required when you configure the network settings for the scanner in fi Series Network Settings.
Internet Explorer mode on Microsoft Edge is not supported.

How to Install the Software (in an Online Environment)

This section explains how to install the necessary software to the computer which is to be connected to the scanner.

The computer must be connected to the Internet.
If the computer which is to be connected to the scanner cannot connect to the Internet, refer to How to Install the Software (in an Offline Environment) (page 37) for installation.

ATTENTION

- If an old version of the software is installed, uninstall it first.

  ➡ Uninstalling the Software (page 350)

- Network Setup Tool included with this installer is the successor product to Network Setup Tool for fi Series. If Network Setup Tool for fi Series is installed, uninstall it before installing Network Setup Tool.

1 Sign in to Windows as a user with administrator privileges.

2 Connect to the downloads website.
https://www.pfu.ricoh.com/fi/d/

3 Click [Online Installer].

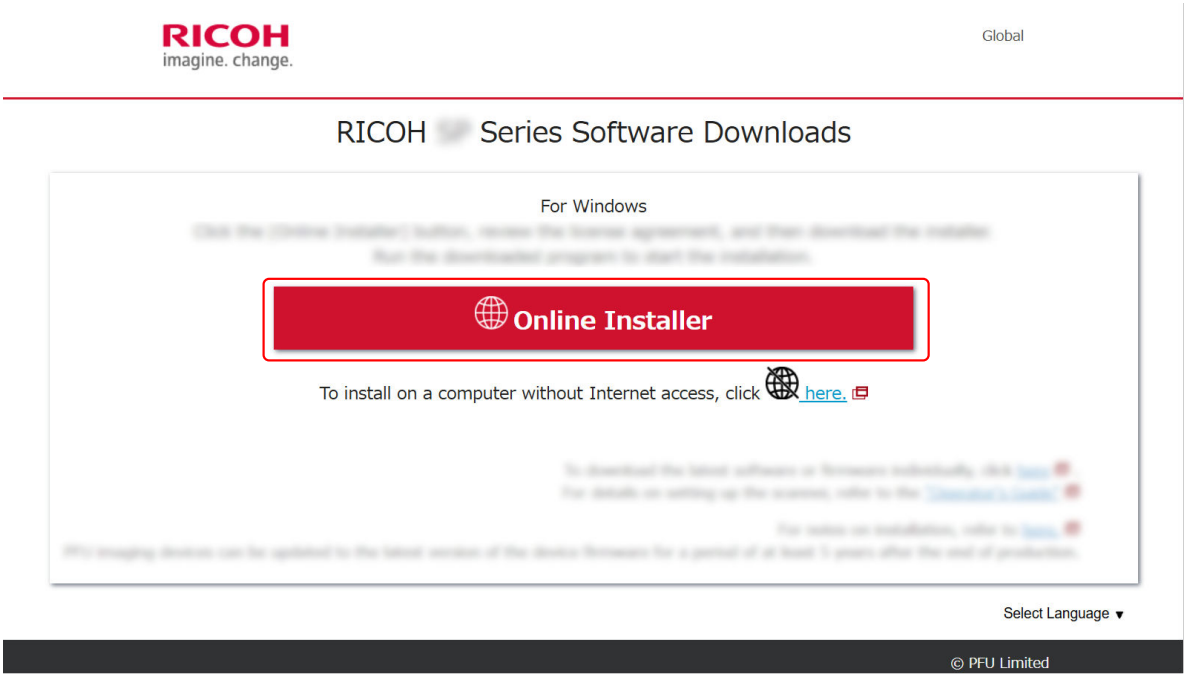

4 On the License Agreement window, confirm the contents and click the [Agree and Download] button.

The download of the online installer starts.

5 Double-click the downloaded online installer [Online Installer fi Series.exe].

6 Select either [Installation (Recommended)] or [Installation (Custom)].

- Installation (Recommended)
  The following software is installed:
  - PaperStream IP (TWAIN)
    The following software is installed at the same time.
    - Software Operation Panel
    - Error Recovery Guide
  - PaperStream Capture
  - PaperStream ClickScan
  - Network Setup Tool
  - Error Recovery Guide (manual)
  - fi Series Online Update
  - Manuals (Safety Precautions, the Operator's Guide, and fi-760PRB Imprinter Operator's Guide)

a Select [Installation (Recommended)] and click the [Next] button.

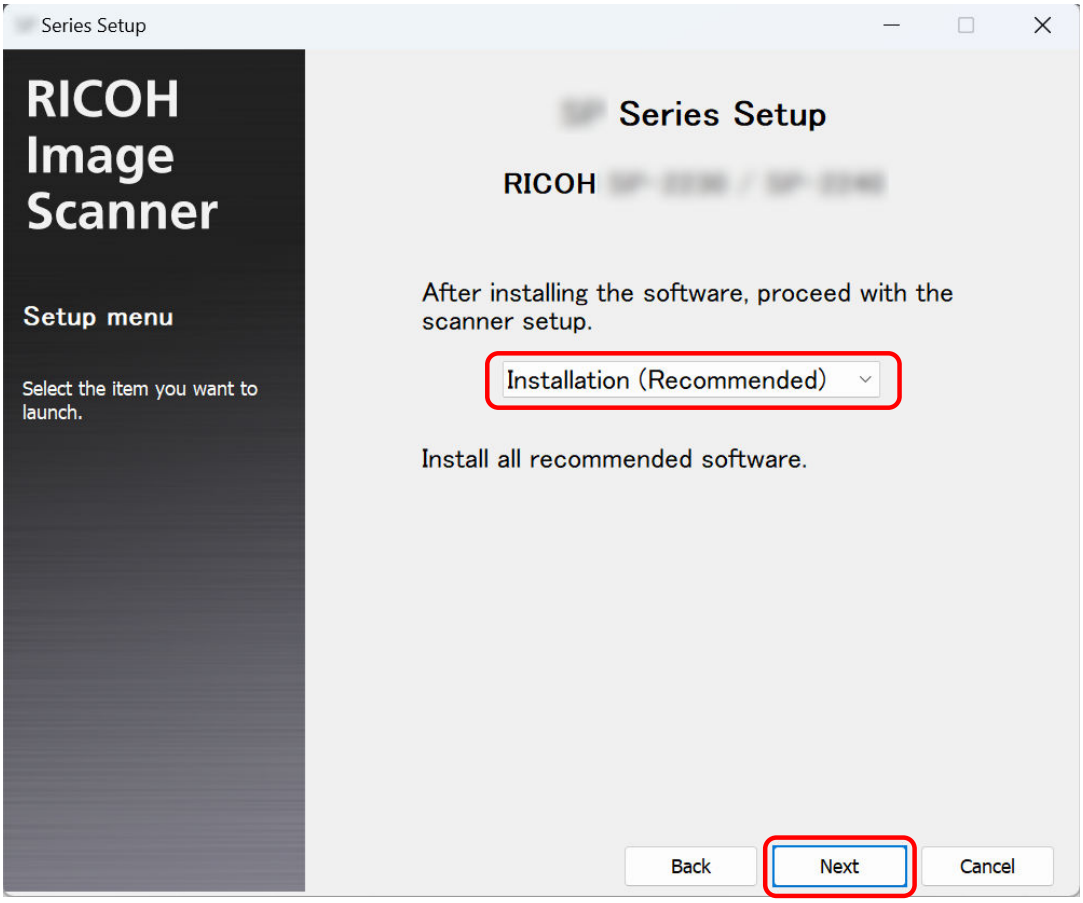

- Installation (Custom)
  Select and install the software that you need.

a Select [Installation (Custom)] and click the [Next] button.

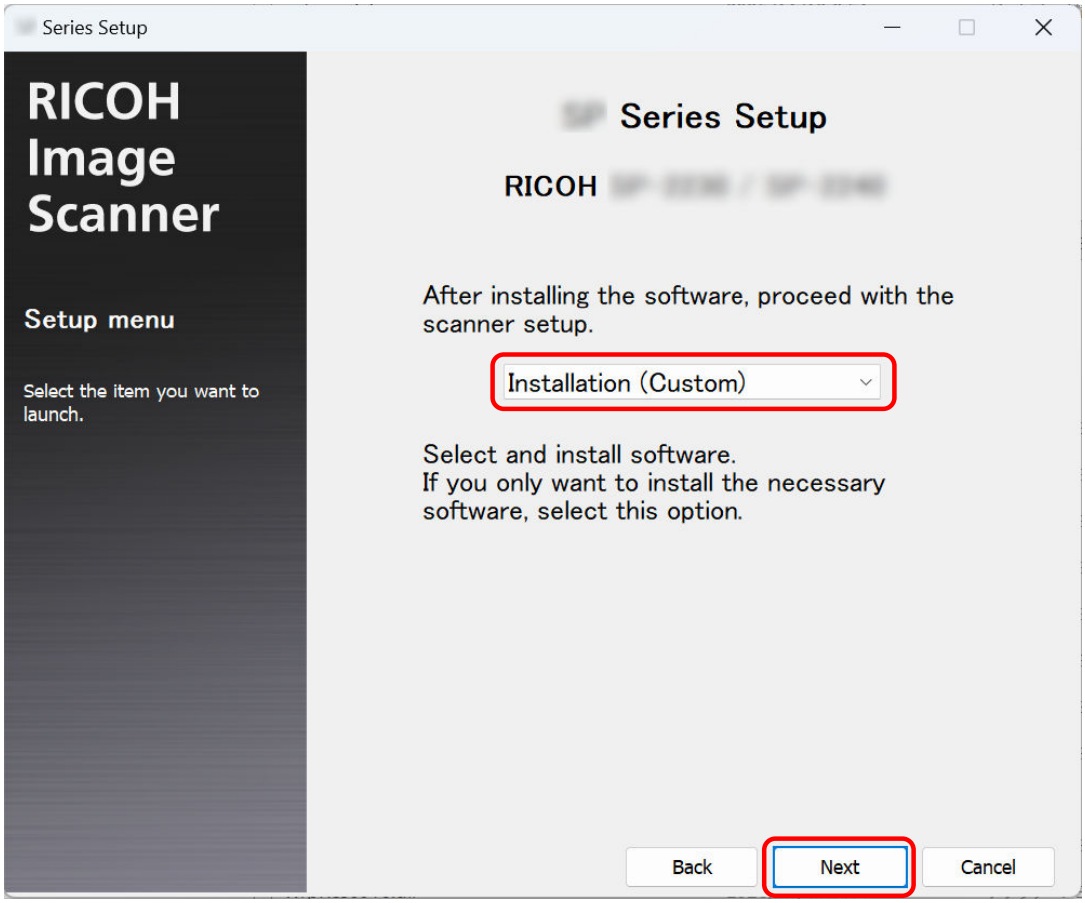

b Select the check boxes for the software to be installed and click the [Next] button.
To connect the scanner to the network, install Network Setup Tool.

7 **Install the software by following the instructions displayed in the window.**
If there is a firmware update, a window appears asking if you want to update the firmware. Select whether to update the firmware and proceed with the installation.

8 **When a window for selecting the scanner connection method appears, select the connection method and follow the instructions displayed in the window.**
For details, refer to the Network Setup Tool Help.

- For Windows 10/Windows Server 2016/Windows Server 2019/Windows Server 2022
  Click [Start] menu → [Network Setup Tool] → [Network Setup Tool Help].
- For Windows 11/Windows Server 2025
  Click [Start] menu → [All apps] → [Network Setup Tool] → [Network Setup Tool Help].

How to Install the Software (in an Offline Environment)

This section explains how to install the necessary software if the computer that will be connected to the scanner does not have Internet access.

In this case, on a computer that can connect to the Internet, obtain the Offline Installer Creator from the download website and create an offline installer (ISO file).
Run the offline installer (ISO file) on the computer which is to be connected to the scanner to install the software.

ATTENTION

- If an old version of the software is installed, uninstall it first.

  ➡ Uninstalling the Software (page 350)

- Network Setup Tool included with this installer is the successor product to Network Setup Tool for fi Series. If Network Setup Tool for fi Series is installed, uninstall it before installing Network Setup Tool.

1. **On a computer that can connect to the Internet, sign in to Windows as a user with administrator privileges.**

2. **Connect to the downloads website.**
   https://www.pfu.ricoh.com/fi/d/

3. **Click "here" in "To install on a computer without Internet access, click here".**

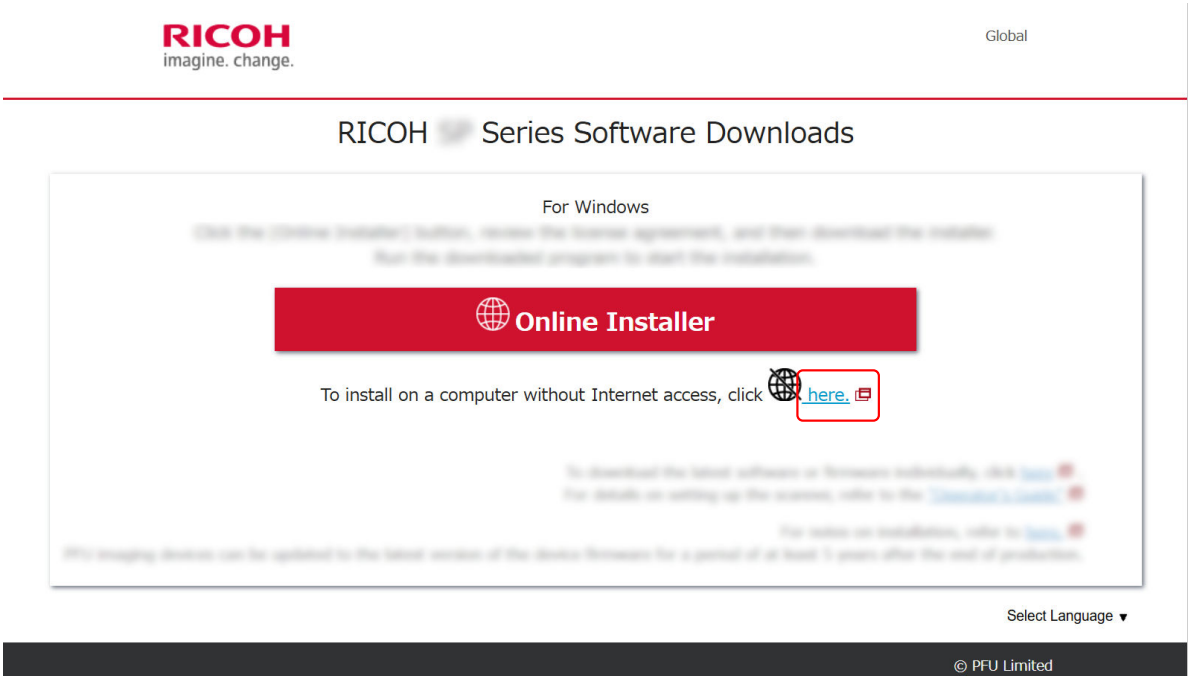

4. **In the window that describes the installation process, click "Offline Installer Creator".**

5 On the License Agreement window, confirm the contents and click the [Agree and Download] button.

The download of the offline installer creator starts.

6 Double-click the downloaded offline installer creator [Offline Installer Creator fi Series.exe].

7 Select either [Installation (Recommended)] or [Installation (Custom)].
An offline installer (ISO file) containing the latest software will be created based on the selection you make here.

- Installation (Recommended)
  The following software is installed:
  - PaperStream IP (TWAIN)
    The following software is installed at the same time.
    - Software Operation Panel
    - Error Recovery Guide
  - PaperStream Capture
  - PaperStream ClickScan
  - Network Setup Tool
  - Error Recovery Guide (manual)
  - fi Series Online Update
  - Manuals (Safety Precautions, the Operator's Guide, and fi-760PRB Imprinter Operator's Guide)

a Select [Installation (Recommended)] and click the [Next] button.

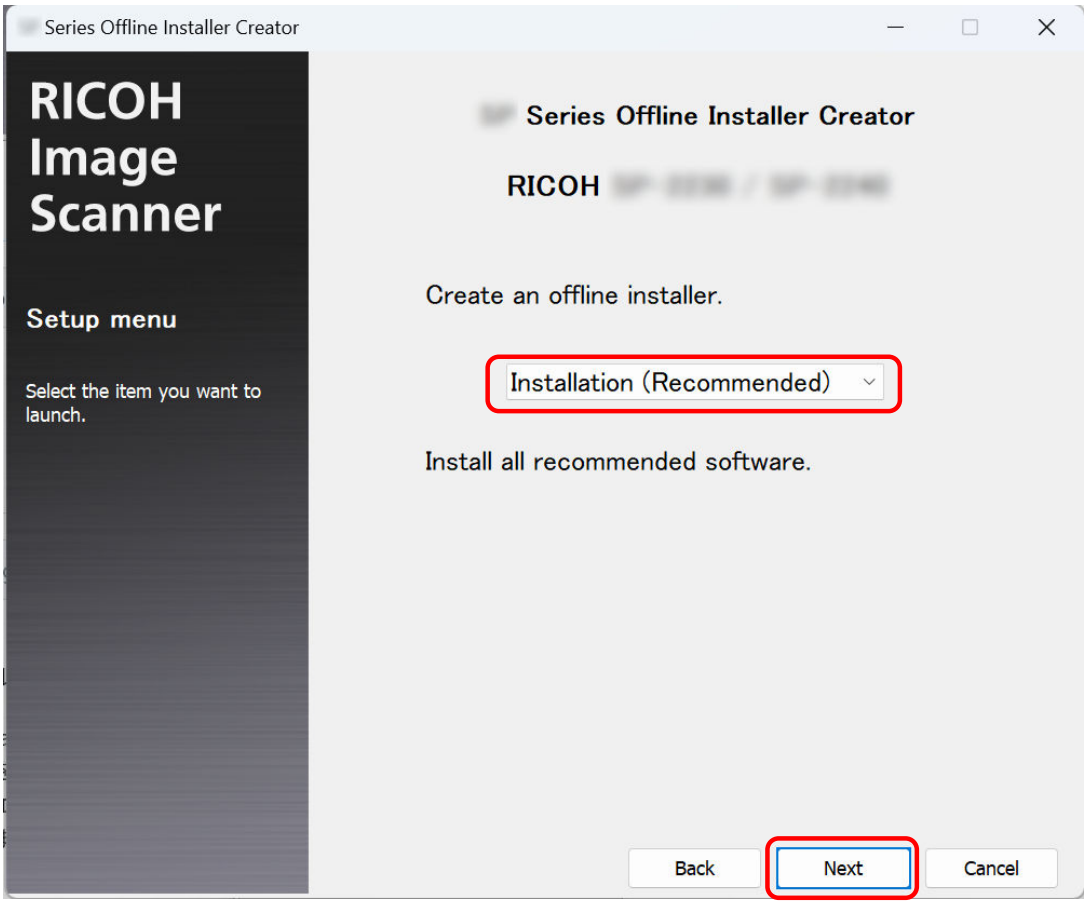

- Installation (Custom)
  Select the software that you need.

a Select [Installation (Custom)] and click the [Next] button.

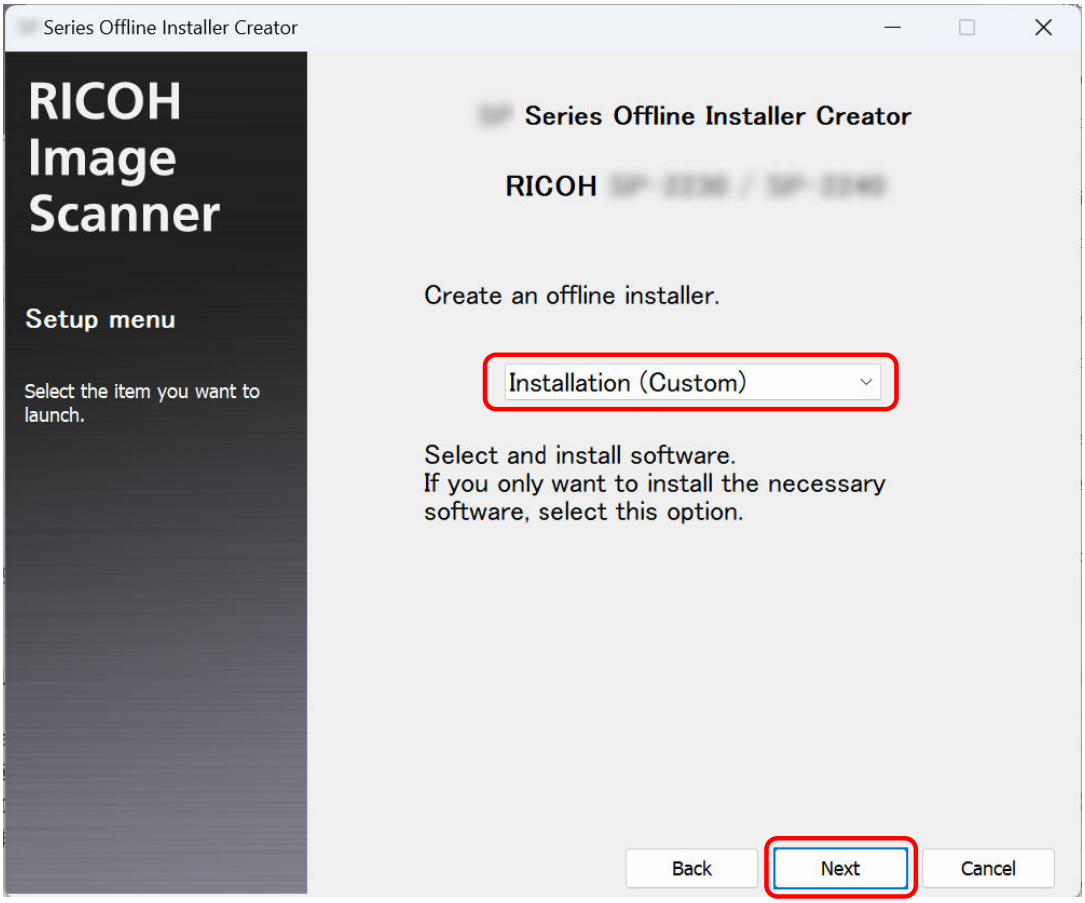

b Select the check boxes for the software to be installed and click the [Next] button.
To connect the scanner to the network, select the check box for Network Setup Tool.

8 Specify where to save the ISO file and click the [Next] button.

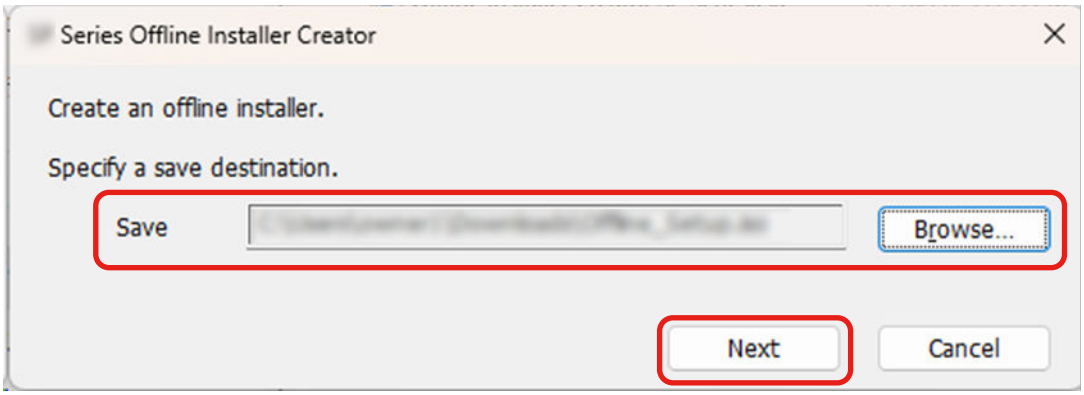

9 Click the [Close] button.

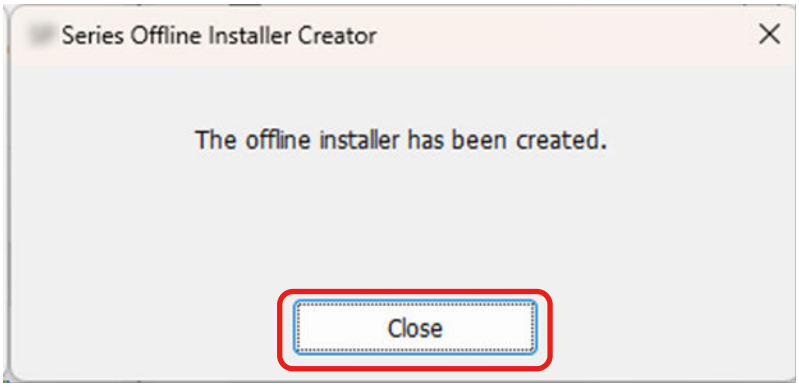

10 Save the ISO file that you created to the computer that will be connected to the scanner.

11 Right-click the saved ISO file, and then click [Mount].

12 Double-click [Setup.exe] in the displayed folder.

13 Click the [Next] button.

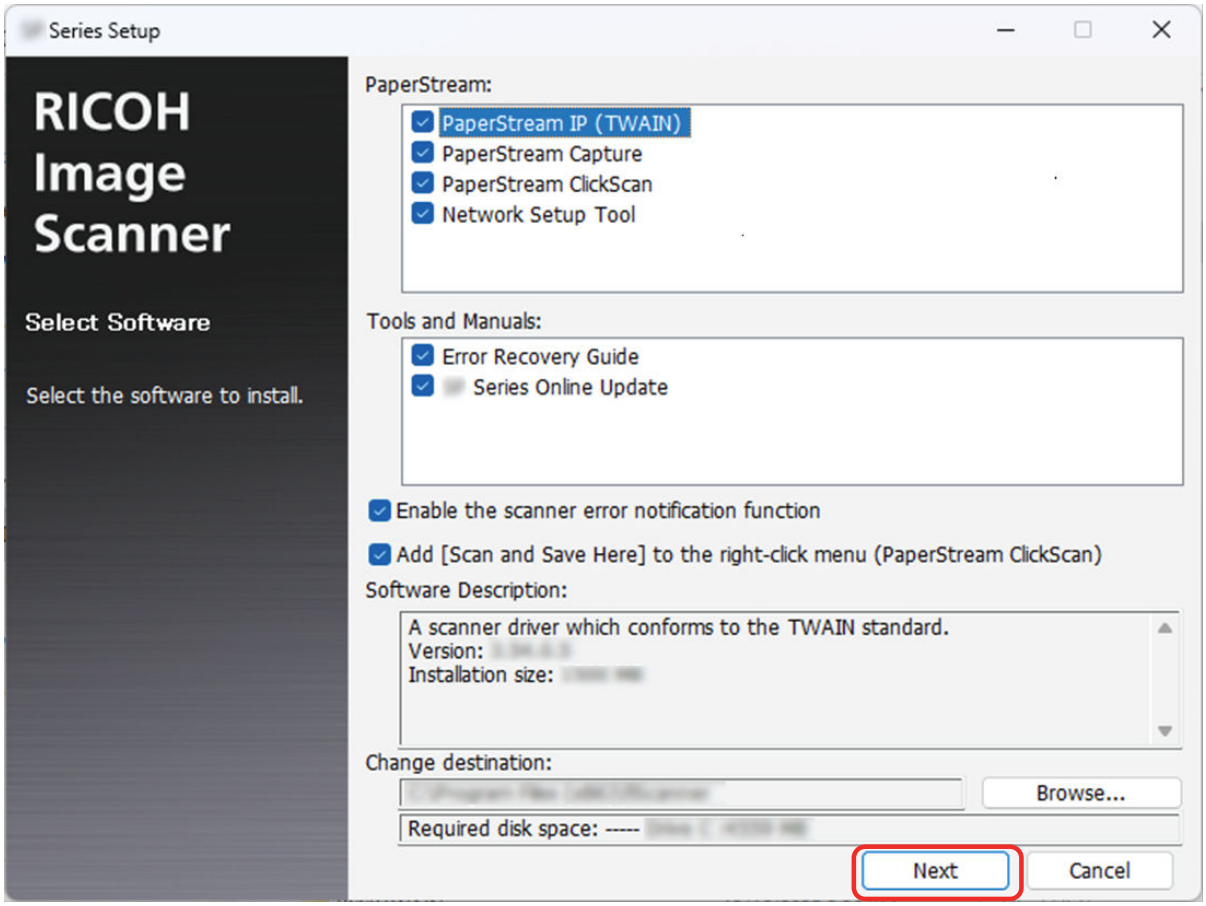

14 Install the software by following the instructions displayed in the window.

15 When a window for selecting the scanner connection method appears, select the connection method and follow the instructions displayed in the window.

For details, refer to the Network Setup Tool Help.

- For Windows 10/Windows Server 2016/Windows Server 2019/Windows Server 2022
  Click [Start] menu → [Network Setup Tool] → [Network Setup Tool Help].
- For Windows 11/Windows Server 2025
  Click [Start] menu → [All apps] → [Network Setup Tool] → [Network Setup Tool Help].

How to Operate the Scanner

This section explains how to operate the scanner.

Turning the Power ON/OFF

The method by which the scanner is powered on/off can be specified from one of the following:

- Pressing the [Power] button on the scanner
- When the scanner's network function is disabled, turning on/off the scanner in accordance with the computer's power

➡ Method for Turning the Scanner ON/OFF [Power Switch Control] (page 321)

This section explains scanner operations assuming the scanner is configured to turn on or off by pressing its [Power] button.

How to Turn the Power ON

1 Press the [Power] button on the scanner.

- fi-8600

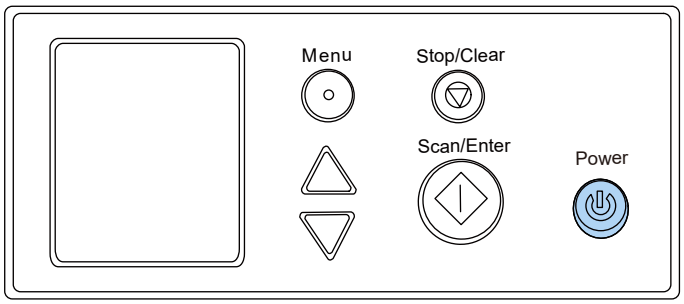

- fi-8700/fi-8700S

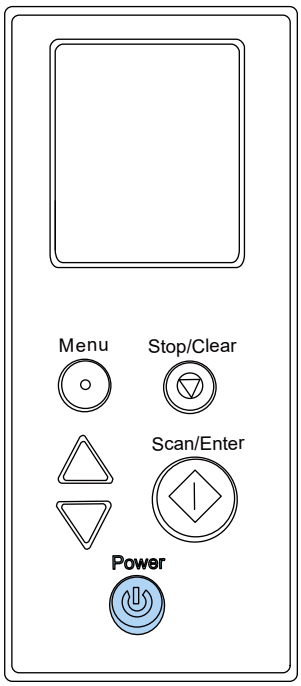

The scanner is turned on, and the [Power] button lights in green.

Note that the following screen is displayed on the LCD during initialization.



When the [Ready] screen is displayed on the LCD, the scanner is ready to start scanning.

How to Turn the Power OFF

1 Press the [Power] button on the scanner for 2 seconds or more.

- fi-8600

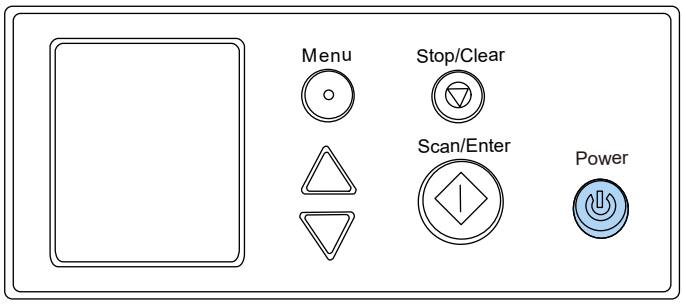

- fi-8700/fi-8700S

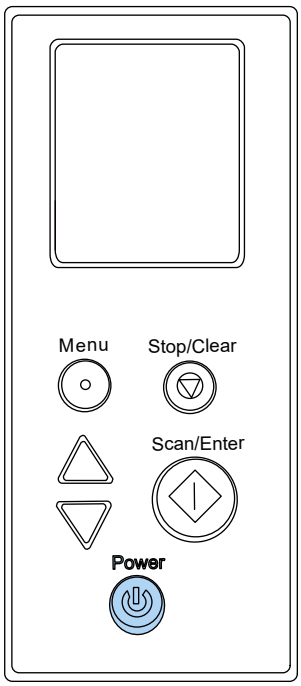

The scanner is turned off, and the [Power] button lights off.

Entering and Resuming from Power Saving Mode

The scanner enters power saving mode when it is left on without being used for a certain period of time.
Power saving mode keeps the power consumption low when the scanner has not been used for a certain period of time.
Power saving mode has two types of settings.

- Power Save
  If the scanner is left powered on for 10 minutes (factory default setting) or longer without being used, it automatically enters power saving mode.
  When the scanner enters power saving mode, the LCD turns off. The [Power] button flashes in green.
  To resume from power saving mode, perform one of the following:
  - Load a document in the ADF paper chute (feeder)
  - Press any button on the scanner
  - Slide the feed mode switch of the scanner
  - Scan a document with the image scanning application
  - Close the ADF when it is open
  - Connect the scanner to the computer using a USB cable
  - Access the scanner from the software to change settings
- Auto Shutdown
  The scanner is turned off automatically if it is left on without being used for a certain period of time (20 minutes for the factory default setting).
  To turn the power back on after the power is turned off automatically, press the [Power] button.

➡ How to Turn the Power ON (page 44)

ATTENTION

- If there is a document that remains on the paper path, the scanner may not enter power saving mode. Remove the documents by referring to When a Paper Jam Occurs (page 199).
- If any of the following conditions are displayed on the operator panel, the scanner will not enter power saving mode.
  - While scanning is in progress
  - While document counting is in progress in Doc Counting Mode
  - While an error is displayed
  - In cleaning mode
- Depending on the image scanning application being used, the scanner might not turn off even if the [Power off after a certain period of time] check box is selected.

- If the scanner is automatically turned off while you are using the image scanning application, exit the application, and then turn the scanner back on.

TIP

- You can change the waiting time for the scanner to enter power saving mode using one of the following methods.
  - [23:Power saving] on the [Settings Menu] screen of the operator panel
    ➡ How to Use the Settings Menu (page 109)
  - Software Operation Panel
    ➡ Waiting Time for the Scanner to Enter Power Saving Mode [Power saving] (page 316)
- You can prevent the scanner from being turned off automatically using one of the following methods.
  - [24:Power-off time] on the [Settings Menu] screen of the operator panel
    ➡ How to Use the Settings Menu (page 109)
  - Software Operation Panel
    ➡ Waiting Time for the Scanner to Enter Power Saving Mode [Power saving] (page 316)

  If the scanner is configured not to be turned off automatically, the scanner's energy consumption will increase.

Opening/Closing the ADF

This section describes how to open and close the ADF.

How to Open the ADF

1 **When using fi-8700/fi-8700S, make sure that the document cover is closed.**
If you open and close the ADF while the document cover is open, an error may occur.

2 **Remove any documents from the ADF paper chute (feeder).**

3 **Lift the ADF release tabs to open the ADF.**

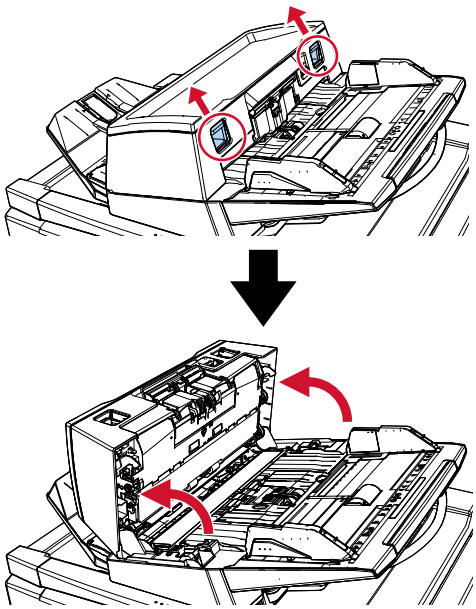

CAUTION When the ADF is open, it might close accidentally. Be careful not to get your fingers caught.

How to Close the ADF

1 **Make sure there is no foreign matter caught inside the ADF.**

2 **Close the ADF.**
Push the center of the ADF until it locks into position, indicated by a clicking sound.

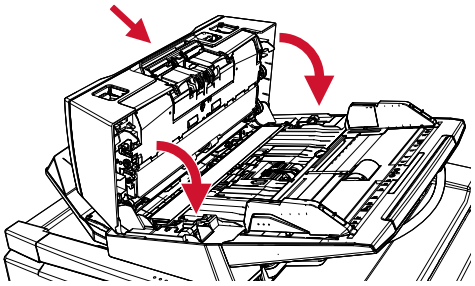

CAUTION Be careful not to get your fingers caught when closing the ADF.

Opening/Closing the Document Cover [fi-8700/fi-8700S]

This section describes how to open and close the document cover.

How to Open the Document Cover

1 **Confirm that the ADF is closed.**
If you open and close the ADF while the document cover is open, an error may occur.

2 **Take hold of the handle and open the document cover.**

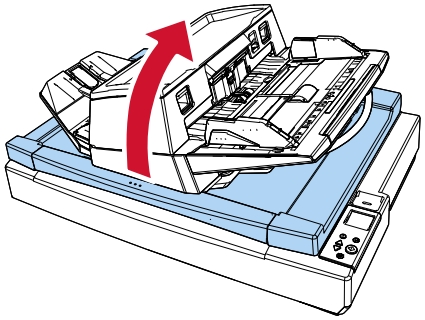

CAUTION

The document cover does not stay open at the point where you stop opening or closing it. Therefore, be careful not to let the document cover close down on your hands.

How to Close the Document Cover

1 **Take hold of the handle and gently close the document cover.**
Push the cover until it locks into position, indicated by a clicking sound.

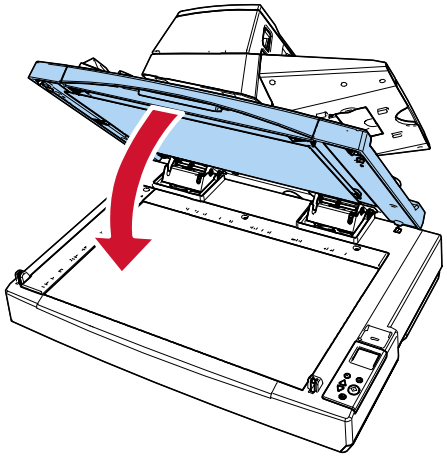

CAUTION

The document cover does not stay open at the point where you stop opening or closing it. Therefore, be careful not to let the document cover close down on your hands.

Adjusting the Position of the ADF [fi-8700/fi-8700S]

The ADF can be repositioned to fit in smaller spaces.
The available positions are as follows:

- Position 1 (factory default)

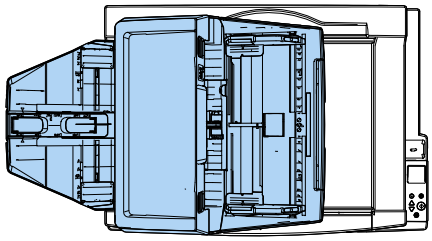

- Position 2 (space-saving type: documents loaded on the right)

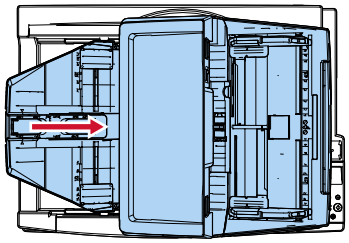

- Position 3 (space-saving type: documents loaded on the left)

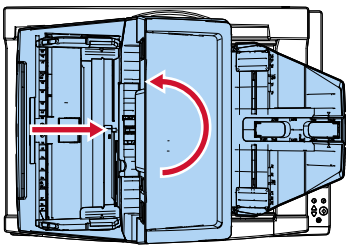

1 Open the document cover.

➡ How to Open the Document Cover (page 51)

2 Remove the two ADF lock screws and insert them into the lock screw storage holes.

The ADF is fixed with the ADF lock screws in place. If the ADF lock screws are removed, the position of the ADF can be adjusted.

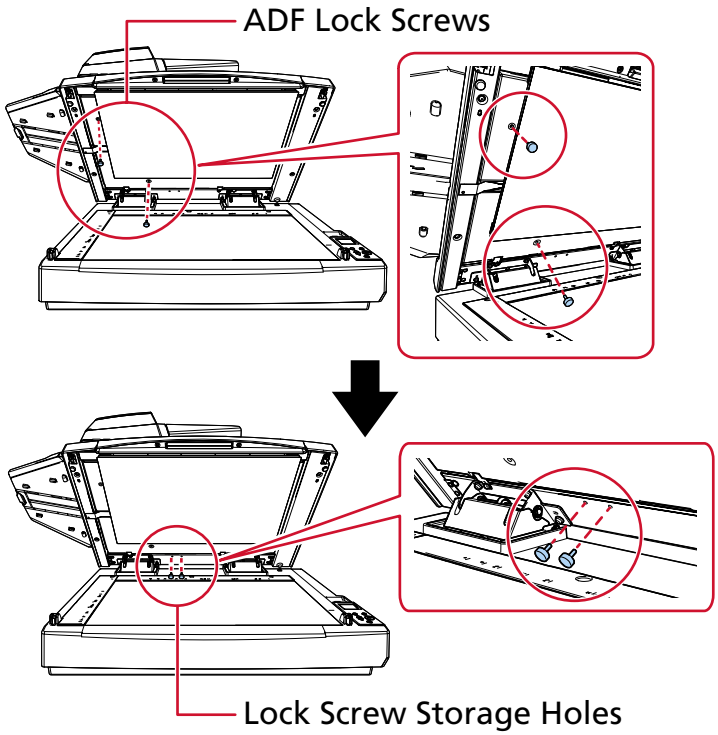

TIP

- Remove the document pad if the ADF lock screws are difficult to remove.
- If you remove the document pad, attach the document pad in the following procedure:

1 Place the document pad against the upper left corner on the document bed.
Make sure the groove in the document pad is in the correct place.

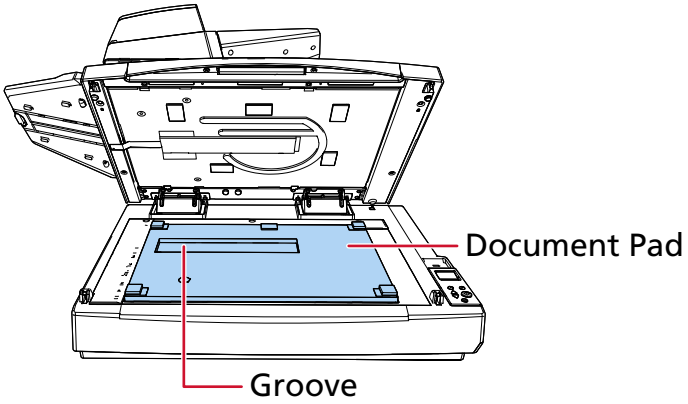

2 Close the document cover slowly.
When you close the document cover, the document pad is attached to the document cover.

3 Close the document cover slowly.

➡ How to Close the Document Cover (page 52)

4 Pull up the stacker.

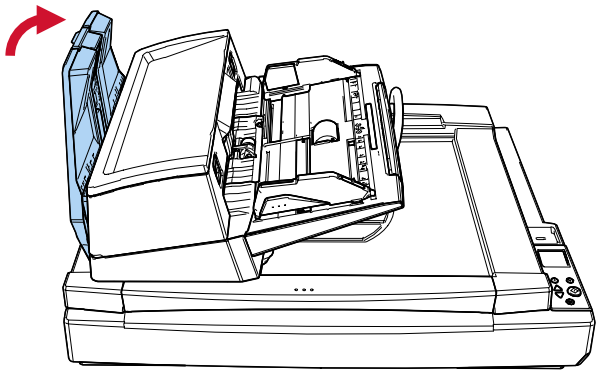

5 Change the position of the ADF.

Move the ADF until it locks into position, indicated by a clicking sound. Make sure that the ADF is securely locked in position.

- To change position 1 to position 2
  Slide the ADF to the center of the scanner.

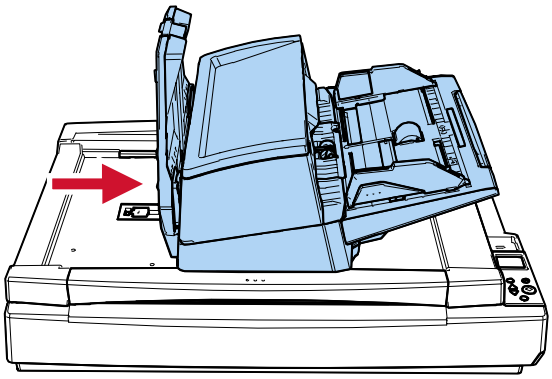

- To change position 1 to position 3
  Slide the ADF to the center of the scanner, and then rotate it counterclockwise by 180 degrees.

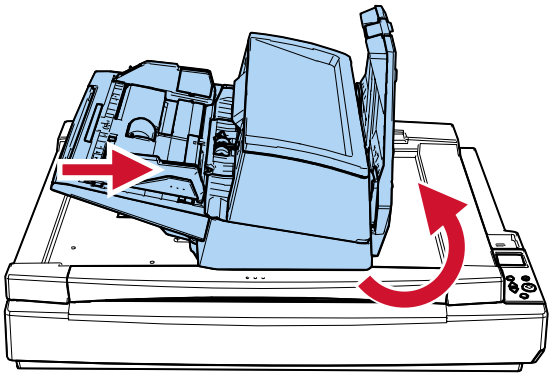

CAUTION

- Be careful not to get your fingers caught when moving the ADF.
- Do not rotate the ADF by more than 180 degrees. The ADF may be damaged.

6 Pull the stacker down.

Setting Up the ADF Paper Chute (Feeder)

Documents loaded in the ADF paper chute (feeder) are fed into the ADF one by one when scanning starts.
When scanning a relatively long document such as an A4 size document, use the chute extension as described below so that the document will be kept straight and fed smoothly.

1 Hold the ADF paper chute (feeder) while pulling out the chute extension.

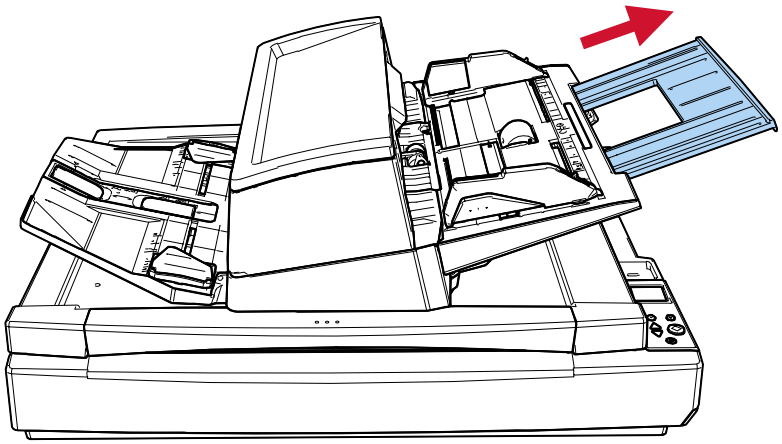

Setting Up the Stacker

Documents loaded in the ADF paper chute (feeder) are ejected onto the stacker one by one during scanning.
When scanning a relatively long document such as an A4 size document, using the stacker extension, stoppers, and stacker side guides as described below will keep the documents straight and feed them smoothly.

1 **Pull out the stacker extension and lift up the stopper.**
Make sure that the stopper is set at a position at least as long as the document length.

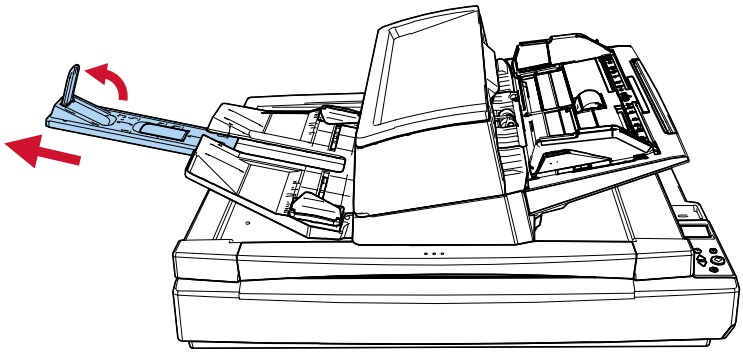

ATTENTION

- Do not hold the stopper to pull out the stacker extension. The stopper may be damaged.
- Do not lift up the stopper more than 90 degrees, because it may break.

TIP

- When scanning short documents such as business cards or plastic cards, lift up the right stopper.
- When scanning documents longer than A3 size, pull out the stacker extension all the way without lifting up the stopper.
- When scanning A4/Letter landscape documents, if you lift up the right stopper, ejected documents can be stacked neatly.
- If ejected documents do not stack neatly, reducing the gap (to about 10 mm) between the documents and the stopper will help align them more neatly.

2 **Lift up the stacker side guides and adjust them to the width of the documents.**

Make sure that the distance between the stacker side guides is wider than the document width.

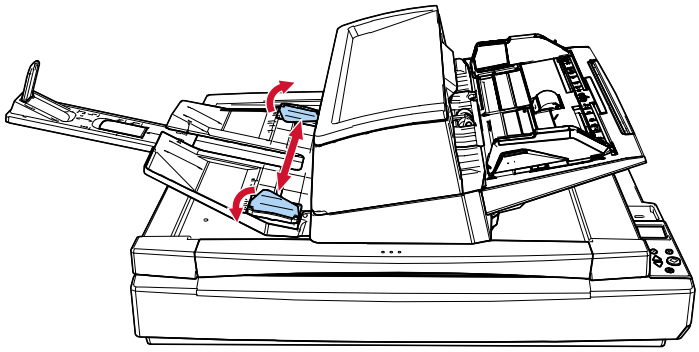

TIP

- Adjust the height of the stacker according to the paper type of the document.
  Select the lower position for ordinary use.
  When scanning a thin or curled document, select the upper position.
  When it is placed in the upper position, the number of documents that can be loaded in the ADF paper chute (feeder) is reduced.
  The suggested number is 100 if the paper weight is 80 g/m^2 (20 lb).

  - Lower position (normal paper)

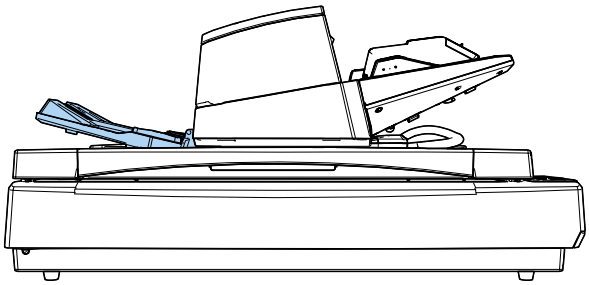

  - Upper position (thin or curled paper)

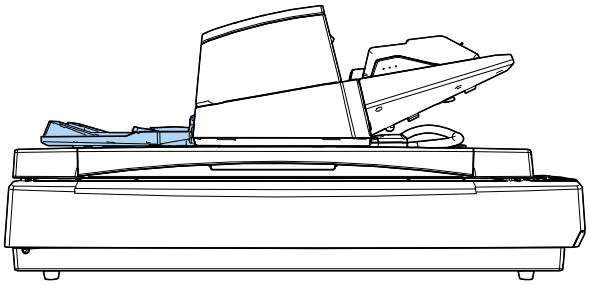

You can place the stacker in the upper position smoothly if you hold both sides of the stacker firmly and push it forward while lifting it up.

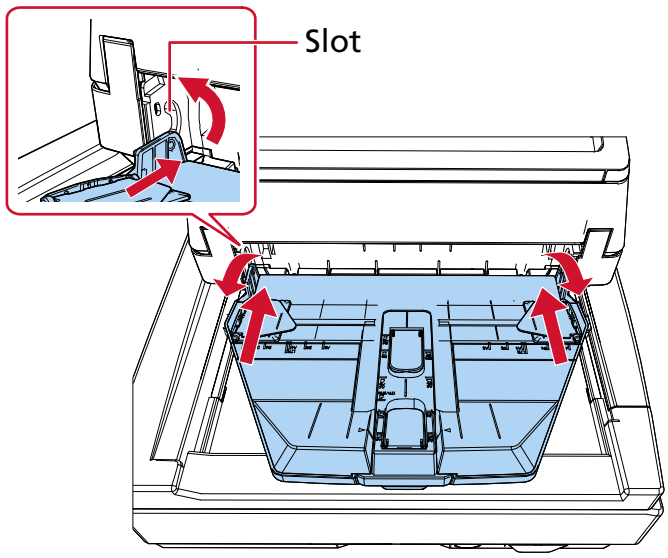

- Slowing down the sheet ejection speed prevents documents from scattering.
  The sheet ejection speed can be slowed down in one of the following ways.
  - [11:Stacking Control] on the [Settings Menu] screen of the operator panel

    ➡ How to Use the Settings Menu (page 109)
  - Software Operation Panel

    ➡ Specifying the Paper Ejecting Speed (Stacking Control) (page 304)

How to Perform a Basic Scan

This section explains how to perform a basic scan.

ATTENTION

Depending on how to use the scanner, use only the USB cable to connect to a computer or use only a LAN cable to connect to a network device. Do not use both cables at the same time.

Start an image scanning application either on the computer connected to the scanner or by pressing a button on the scanner, and then scan documents.

- USB Connection
  - Using a computer to perform a scan

    ➡ Starting a Scan from an Image Scanning Application (page 62)
  - Using the scanner buttons to perform a scan

    ➡ Pressing a Button on the Scanner in order to Start an Image Scanning Application and Perform a Scan (page 64)

    Related software: The scanner's properties window in Windows (Events)
- Wired LAN Connection
  - Using a computer to perform a scan

    ➡ Starting a Scan from an Image Scanning Application (page 62)

    Related software: Scanner Selection Tool, fi Series Network Settings

    ➡ Starting Up Scanner Selection Tool (page 353)

    ➡ Starting Up fi Series Network Settings (page 326)
  - Using the scanner buttons to perform a scan

    ➡ Pressing a Button on the Scanner in order to Start an Image Scanning Application and Perform a Scan (page 64)

    Related software: Scanner Selection Tool, Button Event Manager, fi Series Network Settings

    ➡ Starting Up Scanner Selection Tool (page 353)

    ➡ How to Start Button Event Manager (page 355)

    ➡ Starting Up fi Series Network Settings (page 326)

Depending on how you use the scanner, you can assign different button settings to the buttons. When using multiple methods together, make sure that the setting you wish to use is enabled.

➡ Enabling the Desired Button Configuration (page 72)

Starting a Scan from an Image Scanning Application

This section explains about the basic flow of performing a scan using an image scanning application on the computer.
In this case, a scanner driver and an image scanning application that supports the scanner driver must be installed on the computer.

- Scanner driver
  - PaperStream IP driver
- Image scanning application
  - PaperStream ClickScan
  - PaperStream Capture

To connect the scanner via a wired LAN, you need the following:

- Network Setup Tool
- fi Series Network Settings

➡ Overview of the Bundled Software (page 30)

➡ Network Settings (fi Series Network Settings) (page 326)

Scanning procedures, operations, and scan setting items slightly vary depending on the scanner driver and the image scanning application.
For details, refer to the help for your scanner driver and the manual/help for your image scanning application.

1. **Turn on the scanner.**

   ➡ How to Turn the Power ON (page 44)

2. **Connect the scanner to your computer.**

   - When using a USB connection
     Connect the scanner to the computer using a USB cable.
   - When using a wired LAN connection
     Connect the scanner to the network, and select the scanner using Scanner Selection Tool.

     ➡ Network (page 332)

     ➡ Starting Up IP Address Setting Tool (page 354)
     If you are not in a DHCP environment, you need IP Address Setting Tool.

     ➡ Starting Up Scanner Selection Tool (page 353)

3. **Load a document in the ADF paper chute (feeder).**

   ➡ How to Load Documents in the ADF Paper Chute (Feeder) (page 75)

4. **Start an image scanning application.**

5. **Select a scanner driver to be used for scanning.**
   For some image scanning applications, selection of a scanner driver may not be needed.

6. **Select the scanner to be used for scanning.**

The scanner name depends on the scanner driver type and the scanner connection method. For details, refer to the help for the scanner driver.
For some image scanning applications, selection of the scanner may not be needed.

7 In the setup window for the scanner driver, configure the scan settings.
For some image scanning applications, the setup window for the scanner driver may not appear.

8 Scan the document with the image scanning application.

ATTENTION

Do not perform any of the following operations.
Doing so stops a scan.

- Disconnecting the USB cable
- Disconnecting the LAN cable
- Disconnecting the network
- Signing out of Windows

Pressing a Button on the Scanner in order to Start an Image Scanning Application and Perform a Scan

This section explains the required pre-settings and scanning procedure when you start an image scanning application on your computer and perform a scan by pressing the button on the scanner.
In this case, a scanner driver and an image scanning application that supports the scanner driver must be installed on the computer.

- Scanner driver
  - PaperStream IP driver
- Image scanning application
  - PaperStream Capture

To connect the scanner via a wired LAN, you need the following:

- Network Setup Tool
- fi Series Network Settings

➡ Overview of the Bundled Software (page 30)

➡ Network Settings (fi Series Network Settings) (page 326)

TIP

- If PaperStream Capture is installed, PaperStream Capture is automatically assigned to the button of the scanner.
- If PaperStream ClickScan and PaperStream Capture are installed, the image scanning application that is started up when the [Scan/Enter] button on the scanner is pressed differs depending on whether PaperStream ClickScan resides in the taskbar or not.
  - When it resides in the taskbar
    PaperStream ClickScan will be started up.
  - When it does not reside in the taskbar
    PaperStream Capture will be started up.
- If you change the image scanning application assigned to the scanner button from PaperStream Capture to another application, the newly assigned image scanning application will start.
  If PaperStream Capture is set to occupy the scanner, change the setting to disable this function.

1 Turn on the scanner.

➡ How to Turn the Power ON (page 44)

2 Connect the scanner to your computer.

- When using a USB connection
  Connect the scanner to the computer using a USB cable.
- When using a wired LAN connection
  Connect the scanner to the network, and select the scanner using Scanner Selection Tool.

➡ Network (page 332)

➡ Starting Up IP Address Setting Tool (page 354)
If you are not in a DHCP environment, you need IP Address Setting Tool.

➡ Starting Up Scanner Selection Tool (page 353)

3 Configure the scan settings in the image scanning application.

➡ Starting a Scan from an Image Scanning Application (page 62)

4 On your computer, specify an image scanning application to be started when the button on the scanner is pressed.
The button setting procedure varies depending on the connection method of the scanner.

- When establishing a connection via a USB cable
  Display the [Devices and Printers] setting window for Windows, and set the buttons in [Scan properties] for the scanner.

  ➡ Configuring Button Settings in the Scanner Properties in Windows (for USB Connection) (page 69)

- When establishing a connection via a wired LAN
  Use Button Event Manager to set the button.
  For details about Button Event Manager, refer to the Network Setup Tool Help.

  ➡ How to Start Button Event Manager (page 355)

5 If necessary, configure settings on the image scanning application to be started up.
For some image scanning applications, settings on the image scanning application may be necessary.
For details, refer to the manual/help of the image scanning application to be started up.

6 Load a document in the ADF paper chute (feeder).

➡ How to Load Documents in the ADF Paper Chute (Feeder) (page 75)

7 Press the button on the scanner to start a scan

- When an image scanning application is specified for [Scan Button] in step 4
  While [F00] is displayed in the indicator area of the [Ready] screen, press the [Scan/Enter] button.

  a Press the [△] button/[▽] button while the [Ready] screen is displayed.
  The [Function Selection] screen is displayed.

  b Press the [△] button/[▽] button to select [No.00], and then press the [Stop/Clear] button.

[F00] is displayed in the indicator area of the [Ready] screen.

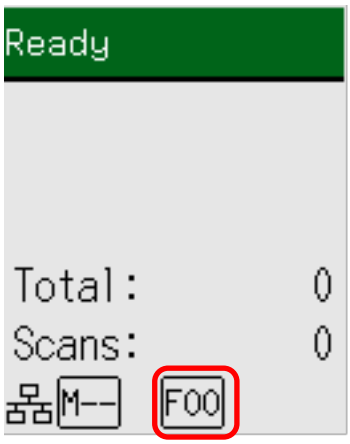

c Press the [Scan/Enter] button.

- fi-8600

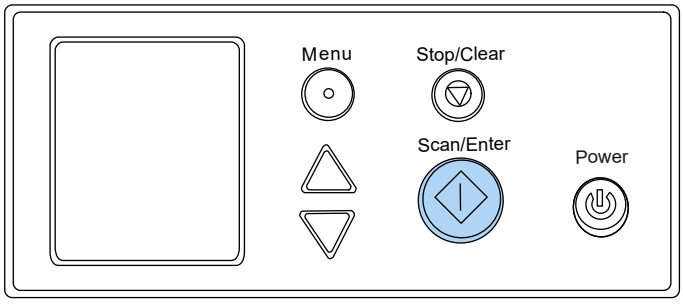

- fi-8700/fi-8700S

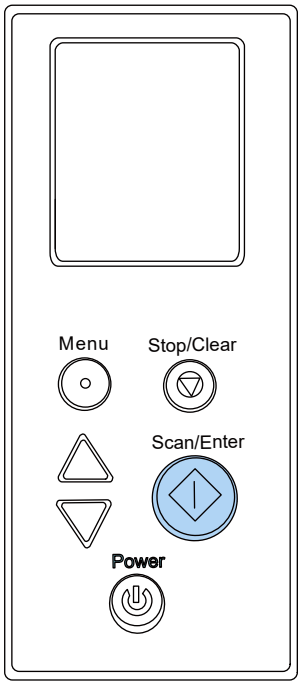

The image scanning application specified for [Scan Button] starts up.

- When an image scanning application is specified for one of the buttons [Send to 01] to [Send to 50] in step 4
  While any code from [F01] to [F50] is displayed in the indicator area of the [Ready] screen, press the [Scan/Enter] button.
  As an example, the following describes the procedure for configuring an image scanning application for [Send to 02].

  a Press the [△] button/[▽] button while the [Ready] screen is displayed.
  The [Function Selection] screen is displayed.

  b Press the [△] button/[▽] button to select [No.02], and then press the [Stop/Clear] button.
  [F02] is displayed in the indicator area of the [Ready] screen.

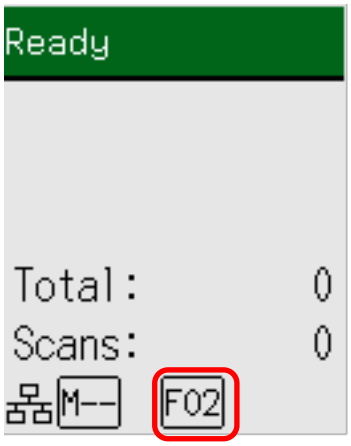

  c Press the [Scan/Enter] button.

  - fi-8600

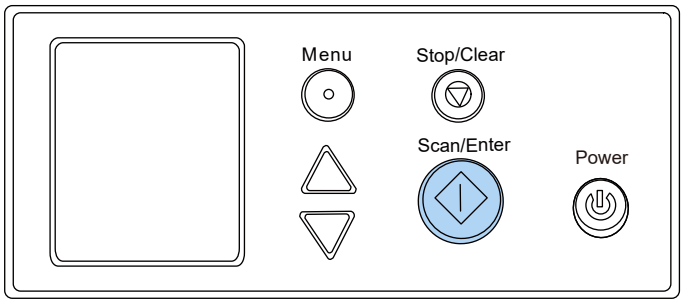

- fi-8700/fi-8700S

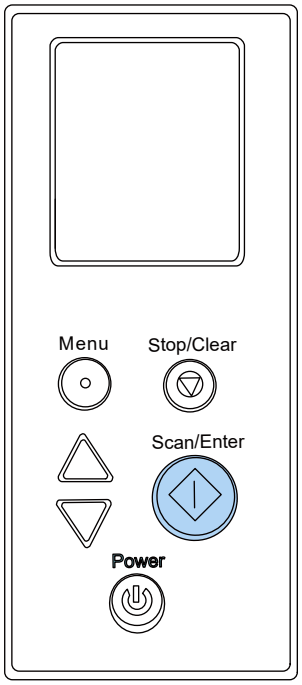

The image scanning application specified for [Send to 02] starts up.

8 If necessary, scan documents with the image scanning application.

ATTENTION

Do not perform any of the following operations.
Doing so stops a scan.

- Disconnecting the USB cable
- Disconnecting the LAN cable
- Disconnecting the network
- Signing out of Windows

See also

Enabling the Desired Button Configuration (page 72)

Configuring Button Settings in the Scanner Properties in Windows (for USB Connection)

Configure the button on the scanner that starts scanning.
Specify an image scanning application for the button on the computer, which you want to start up when the button on the scanner is pressed.

1 Turn on the scanner.

➡ How to Turn the Power ON (page 44)

2 Check whether the scanner and computer are connected via the USB cable.

3 Display [Settings] in Windows.

4 Click [Bluetooth & devices].

5 Click [Printers & scanners].

6 Click [fi-8600], [fi-8700], or [fi-8700S].

7 Click [Scanner properties].

The [Scanners and Cameras] window appears.

8 Click on the scanner icon and click the [Properties] button.

> **ATTENTION**
> When PaperStream ClickScan is resides in the taskbar, the scanner's properties window cannot be displayed.
> To display the scanner's properties window, exit PaperStream ClickScan.

9 In the [Events] tab, select the button that you want to configure from the [Select an event] drop-down list.

- [Scan Button]
  Configure the action to be performed when the [Scan/Enter] button is pressed while [F00] is displayed in the indicator area of the [Ready] screen.
- [Send to 01] to [Send to 50]

Configure the action to be performed when the [Scan/Enter] button is pressed while any code from [F01] to [F50] is displayed in the indicator area of the [Ready] screen.

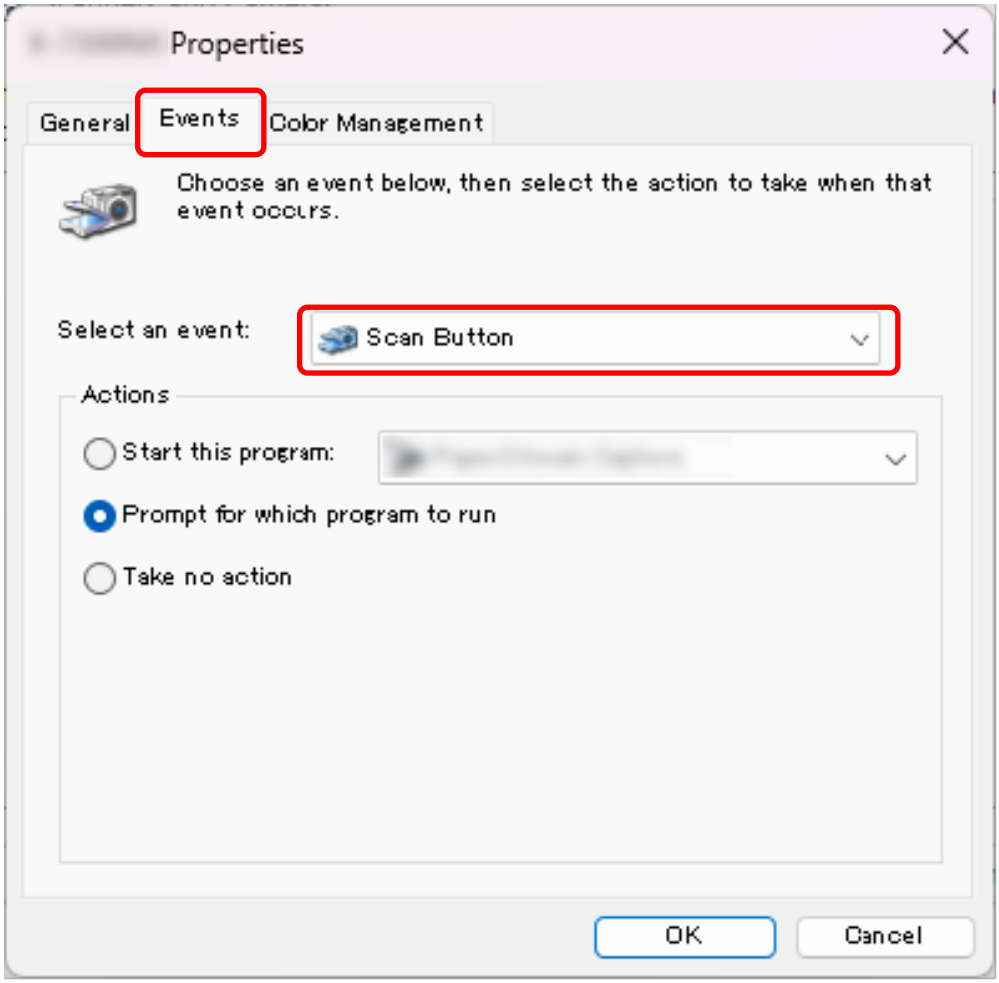

10 Select an image scanning application to be launched when the button is pressed.

Click [Start this program] and select an image scanning application from the program list.

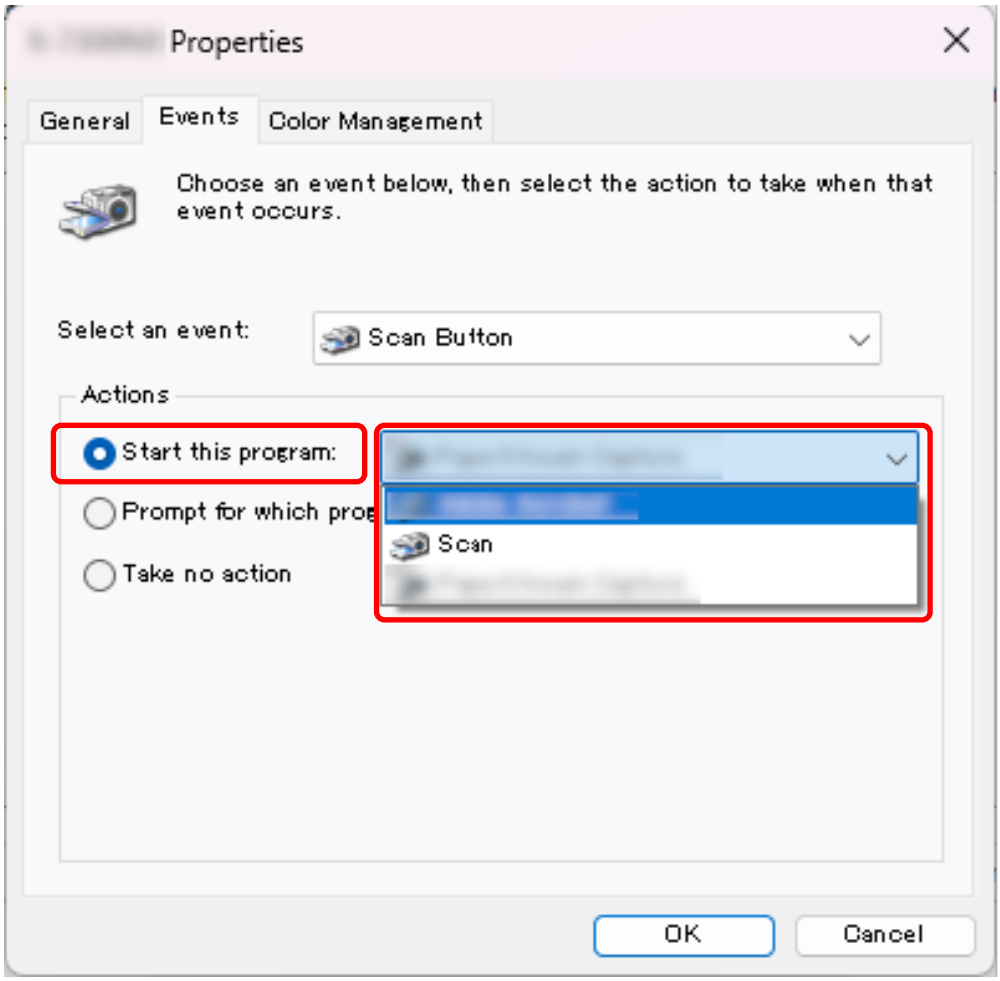

To set multiple buttons, repeat steps 9 to 10.

11 Click the [OK] button.

See also

Enabling the Desired Button Configuration (page 72)

Enabling the Desired Button Configuration

If you have configured a button in more than one way, enable only the configuration you want to use and disable the others.

Scanner Connection Method	Desired Button Configuration	Other Configurations to Disable
USB	● The scanner's properties window in Windows (Events) Configure operations on events	● Button Event Manager Clear the [Watch Button Event] check box
Wired LAN	● Button Event Manager Select the [Watch Button Event] check box (*1)	None

***1:**When using a wired LAN connection, do not select the [Watch Button Event] check box on multiple computers at the same time for the same scanner.

TIP

- If PaperStream Capture is installed, PaperStream Capture is automatically assigned to the button of the scanner.
- If PaperStream ClickScan and PaperStream Capture are installed, the image scanning application that is started up when the [Scan/Enter] button on the scanner is pressed differs depending on whether PaperStream ClickScan resides in the taskbar or not.
  - When it resides in the taskbar
    PaperStream ClickScan will be started up.
  - When it does not reside in the taskbar
    PaperStream Capture will be started up.
- If you change the image scanning application assigned to the scanner button from PaperStream Capture to another application, the newly assigned image scanning application will start.
  If PaperStream Capture is set to occupy the scanner, change the setting to disable this function.

How to Load Documents

This section explains how to load documents on the scanner.

Loading Documents in the ADF Paper Chute (Feeder)

This section explains how to load documents of normal paper.

Preparing Documents to Load Them in the ADF Paper Chute (Feeder)

1 Check the documents.

a Check the paper size and quality that can be scanned with the scanner.

➡ Documents for Scanning (page 83)

b Check whether the documents to be loaded are of the same width or not.
Ways to load documents differ depending on whether the documents are of the same width or not.
If the documents are of different width, refer to Conditions for Mixed Batch Scanning (page 93) or Scanning Documents with Different Widths (page 137).

c Check the number of sheets.
The number of sheets that can be loaded is as follows:

- A4/Letter size documents or smaller

  300 sheets (with paper weight of 80 g/m^2 [20 lb] and thickness of the document stack under 30 mm)

- Documents larger than A4/Letter size

  100 sheets (with paper weight of 80 g/m^2 [20 lb] and thickness of the document stack under 10 mm)

➡ Loading Capacity (page 88)

2 Fan the documents.

a Take out a stack of documents, according to the thickness in the following guidelines:

- A4/Letter size documents or smaller
  30 mm or less
- Documents larger than A4/Letter size
  10 mm or less

b Hold both ends of the documents and fan them a few times.

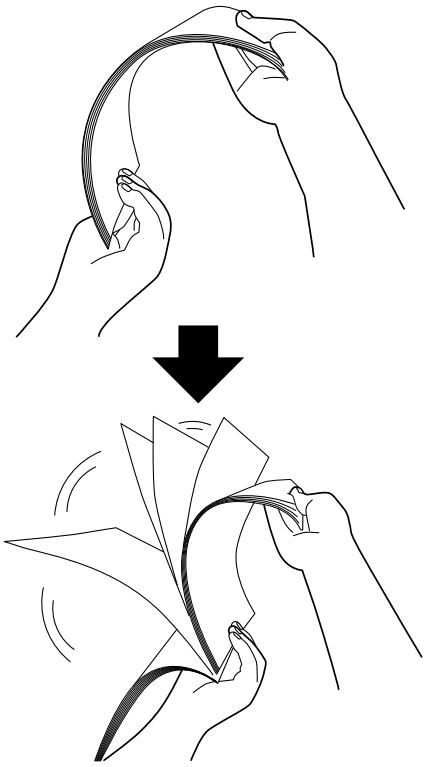

c Rotate the documents by 90 degrees and fan them in the same manner.

d Perform steps a to c for all documents.

e Align the top of the documents.

How to Load Documents in the ADF Paper Chute (Feeder)

There are two ways to load documents.

- How to Load Documents in the Center of the ADF Paper Chute (Feeder) (page 75)
  This style is used mainly when the documents are of the same size.
- How to Load Documents Aligned to Either Side of the ADF Paper Chute (Feeder) (page 77)
  This style is used mainly when the documents are in different sizes or when you want to shift the center of the documents.

ATTENTION

Note that different conditions apply for multifeed detection when you set the documents by either left or right side of the hopper.

How to Load Documents in the Center of the ADF Paper Chute (Feeder)

1 Adjust the ADF paper chute (feeder) according to the length of the documents.

➡ Setting Up the ADF Paper Chute (Feeder) (page 57)

2 Adjust the stacker according to the length of the documents.

➡ Setting Up the Stacker (page 58)

3 Load the documents on the ADF paper chute (feeder) with the side to be scanned facing down.

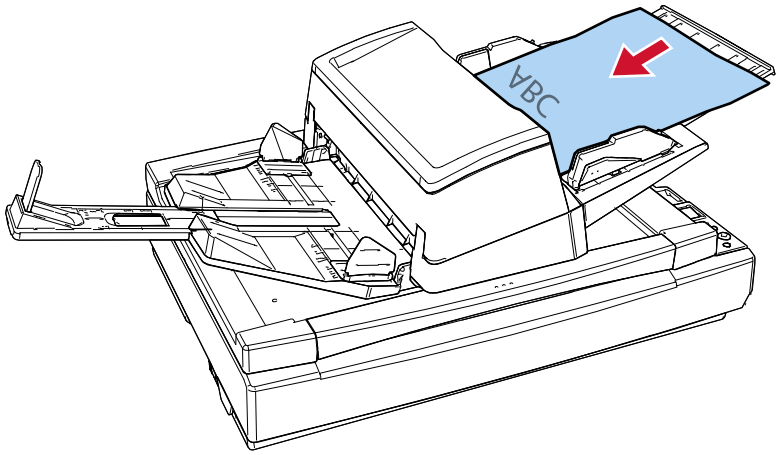

ATTENTION

- Remove all paper clips and staples.
- Reduce the number of documents when documents are not fed into the scanner or overlapped documents are fed.

4 Adjust the side guides to the width of the documents.

Move the side guides while pressing the side guide button so that there is no space between the side guides and the documents.

When there is a space between the side guides and the documents, the documents may be fed skewed.

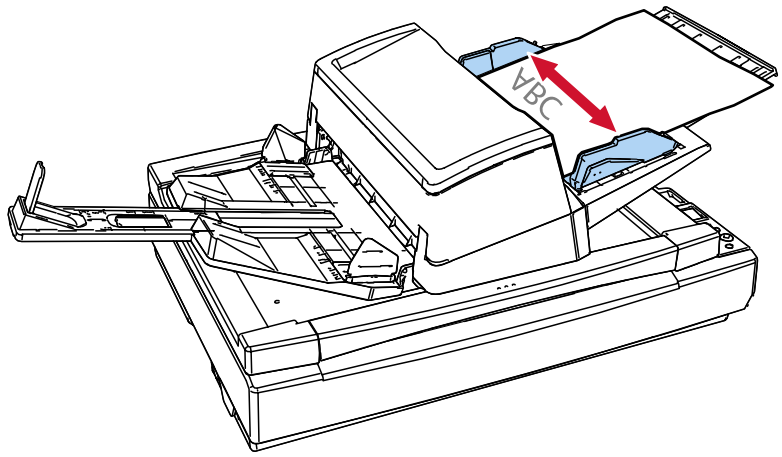

How to Load Documents Aligned to Either Side of the ADF Paper Chute (Feeder)

1 **Adjust the ADF paper chute (feeder) according to the length of the documents.**

➡ Setting Up the ADF Paper Chute (Feeder) (page 57)

2 **Adjust the stacker according to the length of the documents.**

➡ Setting Up the Stacker (page 58)

3 **Slide the side guides to their outermost positions.**

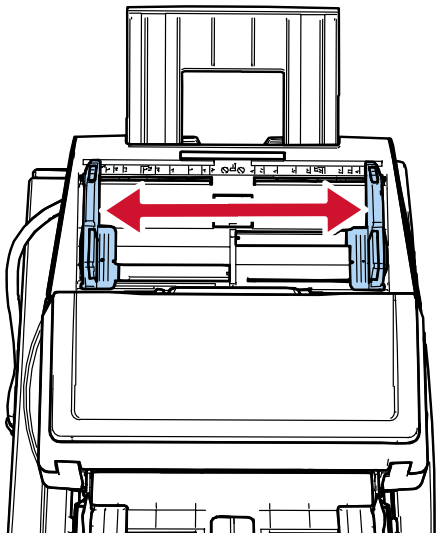

4 **Load the documents on the ADF paper chute (feeder) with the narrowest document within the width of the pick roller and the side to be scanned facing down.**

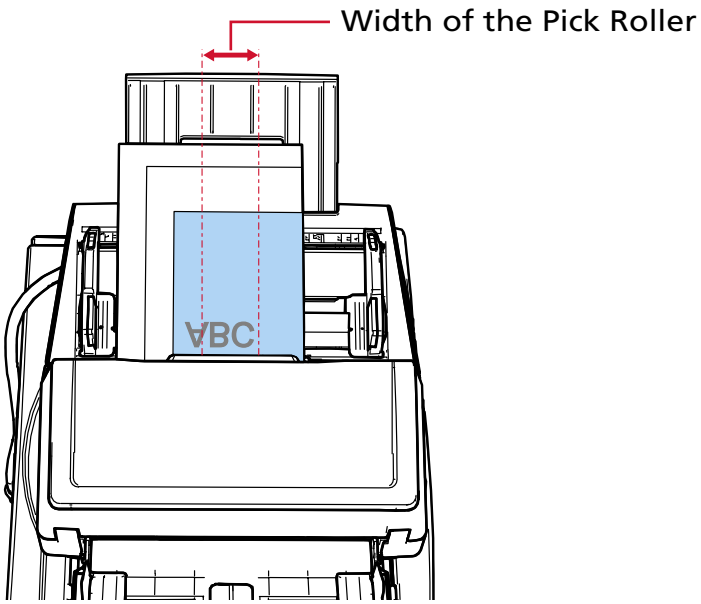

ATTENTION

- Remove all paper clips and staples.
- Reduce the number of documents when documents are not fed into the scanner or overlapped documents are fed.
- Load all documents so that they are positioned fully under both pick rollers. Documents not positioned underneath both pick rollers will not be fed in.

  - Good example

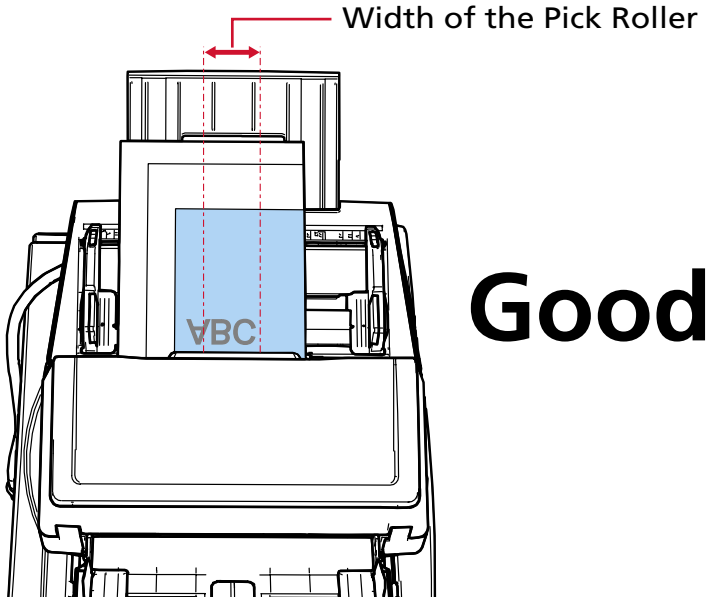

  - Bad example

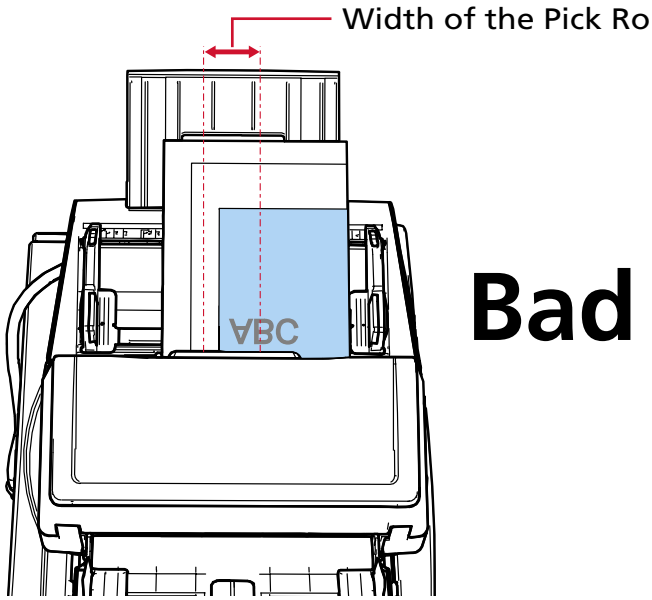

5 Adjust the side guides to the width of the documents.

Move the side guides while pressing the side guide button so that there is no space between the side guides and the widest document.

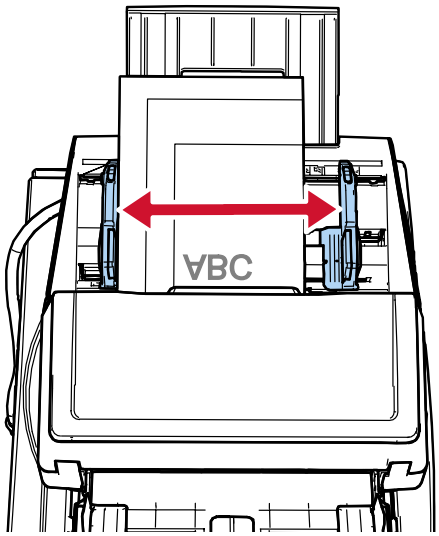

6 Lock one of the side guides.

Slide the side guide lock on the left side guide in the direction of the red arrow to lock the side guide.

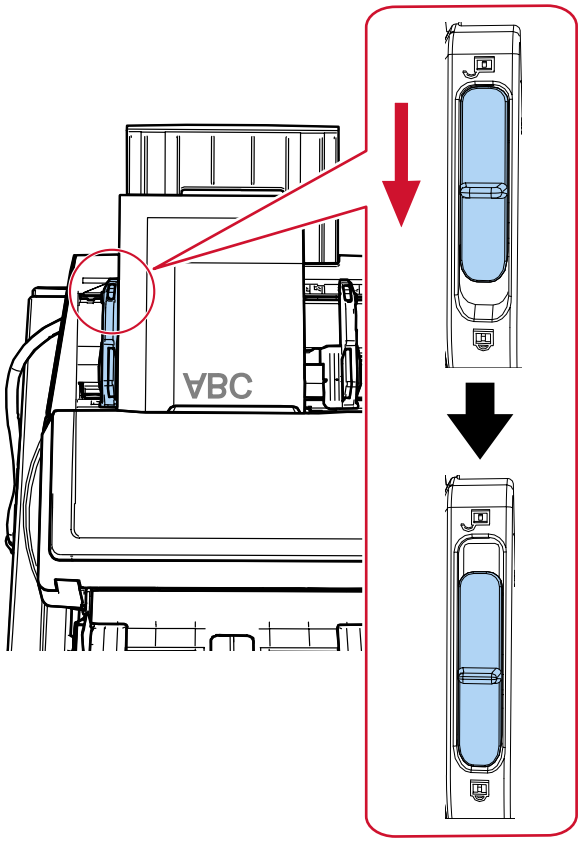

7 Adjust the other side guide to the intended position while pressing the side guide button.

Slide the right side guide so that there is no space between the side guide and the documents. When there is a space between the side guides and the documents, the documents may be fed skewed.

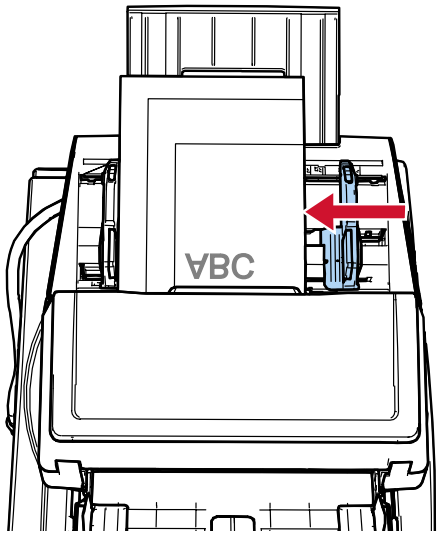

TIP

To unlock the side guide, follow the steps below.

1 Slide the side guide lock on the locked side guide in the direction of the red arrow.

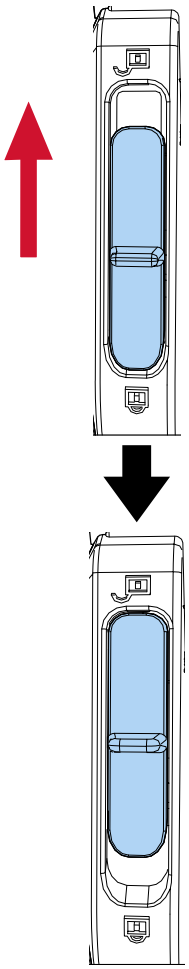

2 Hold both side guides and, while pressing the side guide buttons, move them inward until they meet at the center.

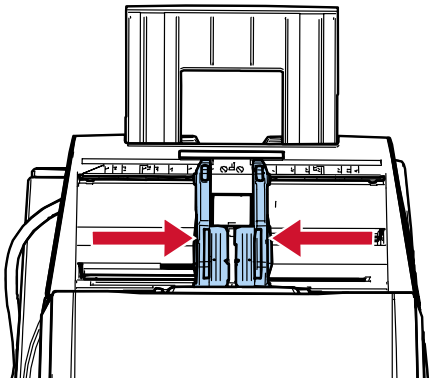

3 Let go of the side guides.
Both side guides will now move in conjunction with each other.

Placing a Document on the Flatbed [fi-8700/fi-8700S]

1 Open the document cover.

➔ How to Open the Document Cover (page 51)

2 Place a document on the document bed.

Place the document face-down to align its top left-hand corner with the reference point.

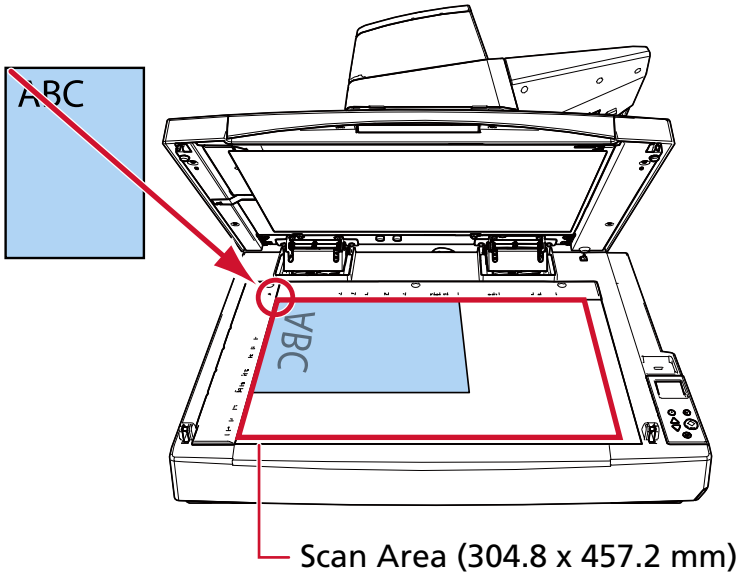

ATTENTION

Note that a curled or folded document may create a small gap between the document and the document bed, causing the scanned image to be blurred.

3 Close the document cover slowly.

➔ How to Close the Document Cover (page 52)

TIP

- A document can be scanned with the document cover open.

  ➔ Scanning Documents on the Flatbed with the Document Cover Open [fi-8700/fi-8700S] (page 156)

- To scan documents on a black background, use an optional black document pad (sold separately).

  ➔ Scanner Options (page 348)

Documents for Scanning

Paper Size

The following paper sizes can be scanned:

ADF	Maximum size (width × length) (*1)	304.8 × 431.8 mm (12.0 × 17.0 in.)
	Minimum size (width × length)	50.8 × 69.0 mm/2.0 × 2.7 in.
Flatbed [fi-8700/fi-8700S]	Maximum size (width × length)	304.8 × 457.2 mm (12.0 × 18.0 in.)

***1:**Depending on the scanner driver or the scan setting of the image scanning application, the memory may be insufficient to perform scanning.
Long page scanning supports documents with a length up to 5,588 mm (220 in.) when the resolution is set to 200 dpi or lower.
Note that the resolution must be set to the following dpi value depending on the document size.

- A length that exceeds 863 mm (34 in.) but does not exceed 2,700 mm (106.3 in.)
  600 dpi or less
- A length that exceeds 2,700 mm (106.3 in.) but does not exceed 4,064 mm (160 in.)
  400 dpi or less
- A length that exceeds 4,064 mm (160 in.) but does not exceed 5,461 mm (215 in.)
  300 dpi or less
- A length that exceeds 5,461 mm (215 in.) but does not exceed 5,588 mm (220 in.)
  200 dpi or less

If you scan a long page document via the USB connection and split the scanned image into multiple pages, a document of up to 200 m (218.8 yd.) can be scanned.

Document Type

The document types (paper types) are as follows:

- Wood-free paper
- Wood-containing paper
- PPC paper (recycled)
- Plastic card

When scanning a document in a type other than the above, perform a test on the same type of document (paper) first to check whether it can be scanned.

Paper Weight (Thickness)

Documents of the following paper weights (thickness) can be scanned with the ADF:

- 20 to 413 g/m^2 (5.3 to 110 lb)
- 27 to 413 g/m^2 (7.2 to 110 lb) for the size larger than A4/Letter
- 128 to 209 g/m^2 (34 to 56 lb) for A8 size
- 1.4 mm or less for plastic cards (Embossed cards allowed (ISO7810 ID-1 type compliant))

Documents That May Not Be Scanned Successfully

The following types of documents may not be scanned with the ADF successfully:

- Documents of non-uniform thickness (such as envelopes or documents with attachments)
- Wrinkled or curled documents
- Folded or torn documents
- Tracing paper
- Coated paper
- Carbon paper
- Photosensitive paper
- Perforated documents
- Documents that are not square or rectangular
- Very thin paper/Very thick paper
- Photographs (photographic paper)

> **TIP**
>
> Documents that may not be scanned successfully can be scanned by using the Carrier Sheet. Wrinkled, curled, or folded documents can also be scanned by smoothing out wrinkles, curls, or folds on documents.

Documents That Must Not Be Scanned

The following types of documents must not be scanned with the ADF:

- Paper-clipped or stapled documents
- Documents on which the ink is still wet
- Documents smaller than 50.8 × 69 mm (2 × 2.72 in.)
- Documents wider than 304.8 mm (12.0 in.)
- Documents other than paper/plastic card (such as fabric, metal foil and OHP film)
- Important documents such as certificates and cash vouchers which must not be damaged

ATTENTION

Since carbonless paper contains chemical substances that may degrade rollers such as the brake roller, the scanner may fail.

Notes on Documents and Plastic Cards

- **Notes on documents**

  Depending on the documents to be scanned, take note of the following.

  - Since carbonless paper contains chemical substances that may degrade the rollers such as the brake roller, take note of the following:

    - Cleaning
      If paper jams occur frequently, clean the brake roller and pick roller.

      ➡ Daily Care (page 168)

    - Replacing the consumables
      The life of the brake roller and pick roller may end sooner compared to scanning wood-free papers.

  - When scanning wood containing papers, the life of the brake roller and pick roller may end sooner compared to scanning wood-free papers.
  - The brake roller and pick roller may be damaged when a photo/sticky note on a document comes into contact with these parts during scanning.
  - The surface of the document may be damaged when glossy papers such as photos are scanned. For documents that can be damaged quite easily, use the optional Carrier Sheet.
  - The light of the LED may reflect brightly when glossy papers are scanned.
  - When scanning semi-transparent documents, set [Brightness] higher in the scanner driver to avoid bleed-through.
  - When you scan documents written in lead pencil, there may be black traces left on the document, which may cause feeding errors.
    Clean the rollers frequently.

    ➡ Daily Care (page 168)

  - If documents are not fed, or documents are fed overlapped or jammed frequently, refer to Troubleshooting (page 220).
  - When you scan documents with the ADF, all the documents must be flat on the leading edge. Make sure that curls on the leading edge of the documents are kept within the following range.

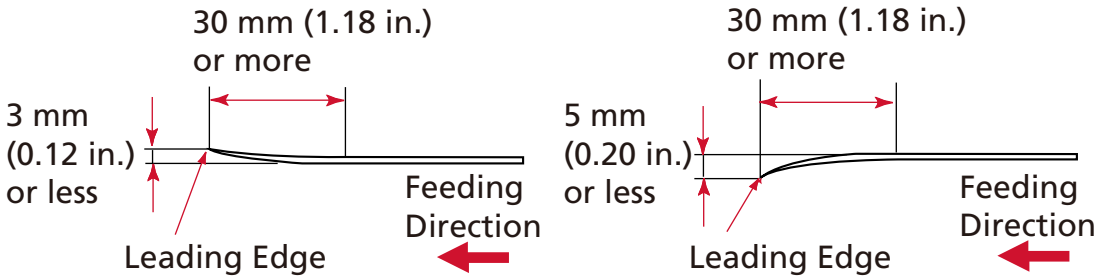

- **Notes on plastic cards**

  When you scan plastic cards, take note of the following.

- Make sure you use a card that meets the following specifications, and check if the card can be fed before scanning it.
  - Type: Compliant with the ISO7810 ID-1 type
  - Size: 85.6 × 53.98 mm/3.37 × 2.13 in.
  - Thickness: 1.4 mm or less (Embossed cards allowed)
  - Material: PVC (polyvinyl chloride) or PVCA (polyvinyl chloride acetate)
- When scanning plastic cards from the ADF, you can load up to 3 cards in the ADF paper chute (feeder).
  Note that you can only load one card at a time if the plastic card is embossed.

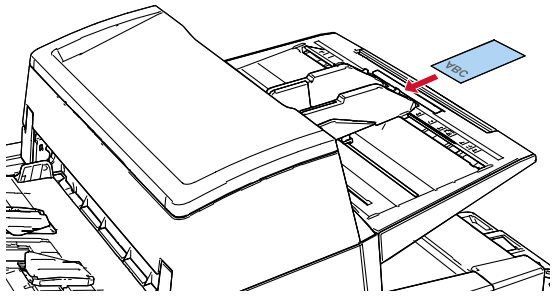

- Plastic cards should be loaded vertically.
- It is recommended to load plastic cards on the ADF paper chute with the front side facing down.
- Rigid cards may not be fed properly.
- If there is dirt on the surface of the card, such as grease marks (fingerprints), perform scanning after wiping the dirt off.
- Plastic cards cannot be scanned when the imprinter is connected.
- Scanning a thick document such as a plastic card will always be falsely detected as overlapped documents.
  In that case, specify one of the following settings and try scanning again.
  - Configure not to detect certain overlap patterns.
  - Disable the setting to detect overlapped documents by the ultrasonic sensor.
  - Scan with Manual Single Mode.

Loading Capacity

The number of sheets that can be loaded in the ADF paper chute (feeder) is determined by the paper size and paper weight.
See the graph below.

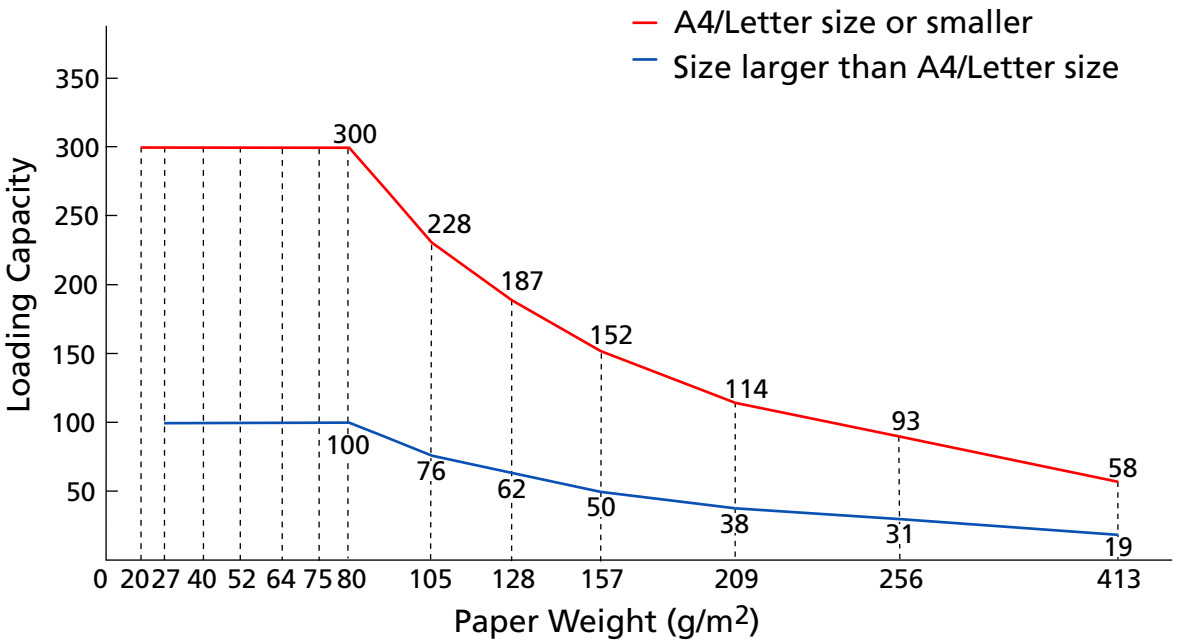

Unit	g/m²	lb	kg
Conversion	20	5.3	17
	27	7.2	23
	40	11	34.5
	52	14	45
	64	17	55
	75	20	65
	80	21	69
	105	28	90
	128	34	110
	157	42	135
	209	56	180
	256	68	220
	413	110	355

Area Not to Be Perforated

An error may occur when there are punched holes in the area colored in light blue in the figure below.
The above condition applies when the document is loaded at the center point between the pick rollers.
Use the flatbed [fi-8700/fi-8700S] to scan such documents.

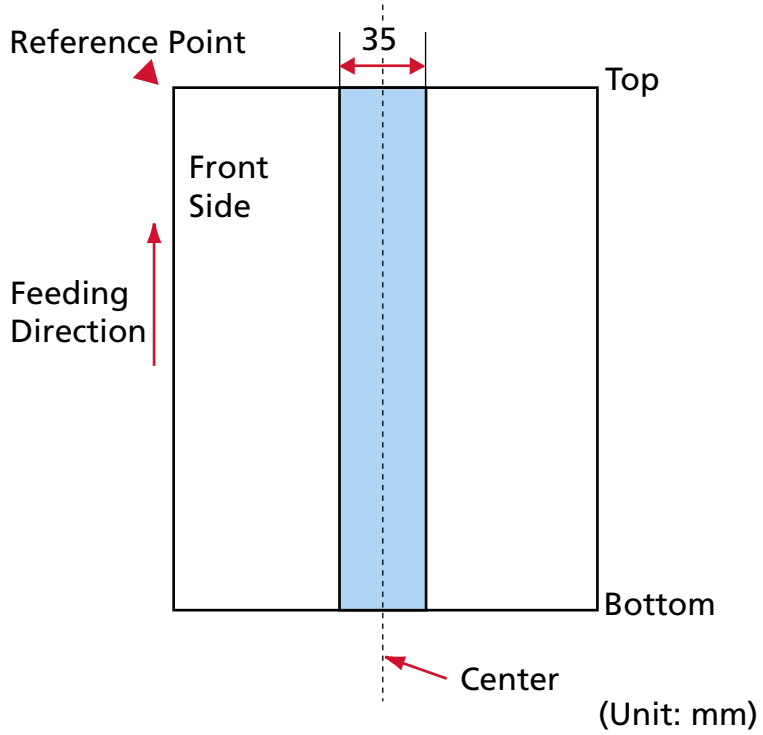

TIP

If there are any holes in the 35 mm-wide central column, you can move the document to the left or right to avoid an error.

Loading Documents with Index Tabs or Non-rectangular Documents

To scan a document with index tabs or a document that is non-rectangular, place it in a way that it will not get caught when it is being fed through.

Good example

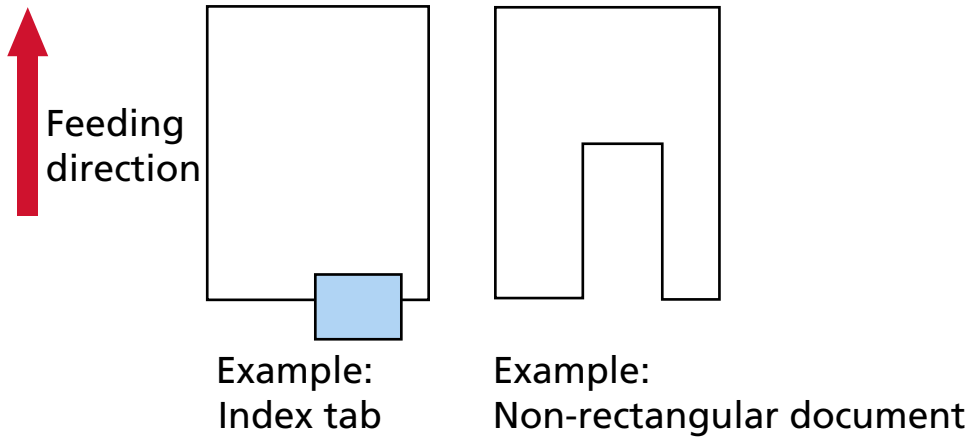

Bad example

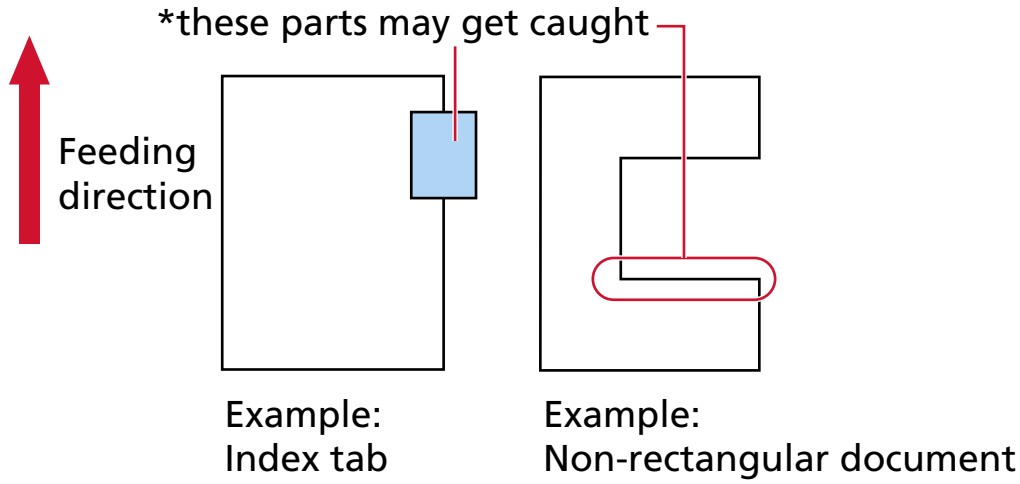

ATTENTION

When you perform scanning as shown in the bad example above, the indicated sections may be caught during feeding. This may cause a paper jam or tear the document.

Conditions Required to Accurately Detect Overlapped Documents (Multifeed)

Multifeed is an error that occurs when two or more sheets are overlapped and fed at once.
Overlapped documents are detected with the ultrasonic sensor or according to the difference in length of the documents.
For documents that are loaded, the following conditions are required for overlapped documents to be detected accurately.
The above condition applies when the document is loaded at the center point between the pick rollers.

Detecting Overlapped Documents with the Ultrasonic Sensor

- Paper weight: 20 to 413 g/m^2 (5.3 to 110 lb)
- Do not punch holes within 35 mm (1.38 in.) over the center of the document.

  ➡ Area Not to Be Perforated (page 89)
- Do not attach other documents with glue or other adhesive within 35 mm (1.38 in.) over the center of the document. Doing so may cause the false detection of overlapped documents.

  ➡ Area Not to Be Perforated (page 89)

Detecting Overlapped Documents according to the Difference in Length

- Load the documents of the same length in the ADF paper chute (feeder).
- Variation in document lengths: 1% or less
- Do not punch holes within 35 mm (1.38 in.) over the center of the document.

  ➡ Area Not to Be Perforated (page 89)

Detecting Overlapped Documents with the Ultrasonic Sensor and According to the Difference in Length

- Load the documents of the same length in the ADF paper chute (feeder).
- Paper weight: 20 to 413 g/m^2 (5.3 to 110 lb)
- Variation in document lengths: 1% or less
- Do not punch holes within 35 mm (1.38 in.) over the center of the document.

  ➡ Area Not to Be Perforated (page 89)
- Do not attach other documents with glue or other adhesive within 35 mm (1.38 in.) over the center of the document. Doing so may cause the false detection of overlapped documents.

  ➡ Area Not to Be Perforated (page 89)

ATTENTION

When an option to detect overlapping with the ultrasonic sensor is selected, scanning a thick document such as a plastic card will be falsely detected as overlapping of documents.
In that case, specify one of the following settings and try scanning again.

- Configure not to detect certain overlap patterns.
- Disable the setting to detect overlapped documents by the ultrasonic sensor.
- Scan with Manual Single Mode.

TIP

- The accuracy of detection for overlapped documents may drop depending on the document type.
  Overlapping cannot be detected for the top 30 mm (1.18 in.) of a document in the feeding direction.
- Do not specify the detection method by document length when scanning a mixed batch of documents with different lengths and detecting overlapped documents.

Conditions for Mixed Batch Scanning

The following conditions apply when a mixed batch of documents with different paper weights/friction coefficients/sizes is scanned.
Make sure to test a few sheets first to check if the mixed batch of documents can be fed.
For details about scanning, refer to Scanning Documents with Different Widths (page 137).

Paper Direction

Align the direction of the paper fiber with the feed direction.

Paper Weight (Thickness)

When scanning documents with different paper weight in the same batch, keep the paper weight within the following acceptable range:

20 to 413 g/m^2 (5.3 to 110 lb)

Friction Coefficient

It is recommended that the same paper brand from the same manufacturer is used for documents.
When different paper manufacturers/brands are mixed in documents to be scanned, it affects the feeding performance as the difference in friction coefficient increases.
The following friction coefficients are recommended:
0.35 to 0.60 (reference value for paper friction coefficient)

Document Position

Load all documents so that they are positioned fully under both pick rollers (width across both pick rollers: approx. 48 mm/1.89 in. wide).

For a guideline for mixed batch scanning, refer to Combinations of Standard Paper Sizes in a Mixed Batch (page 95) in Paper Size (page 94).

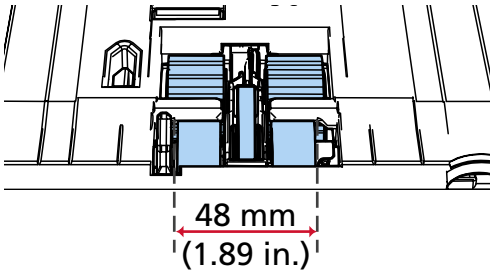

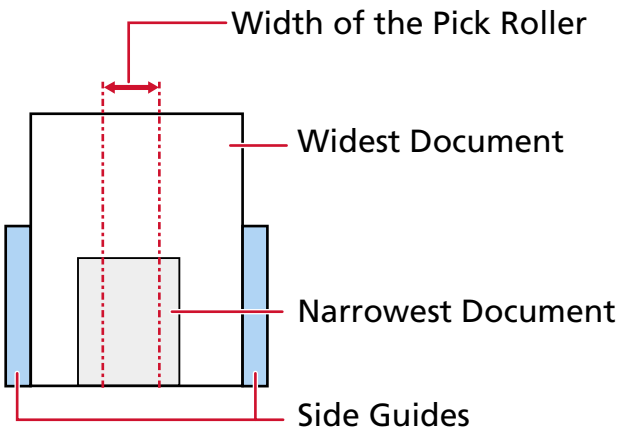

TIP

When the narrowest document covers the width of the pick roller even when it is loaded towards one side as shown in the image below, load documents aligned on one side. So that it prevents documents from skewing when being fed.

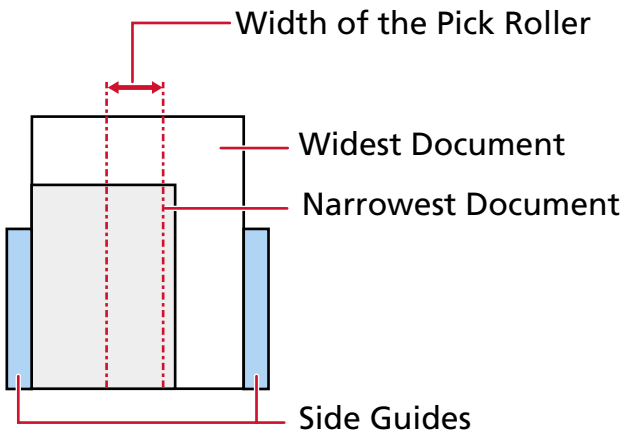

Paper Size

When a mixed batch with different sizes is scanned, not feeding the documents straight may cause troubles such as paper jams or part of the image to appear missing.

It is recommended that you check the scanned images if the documents were fed skewed.

ATTENTION

When a mixed batch with different sizes is scanned, documents are more likely to skew because the side guides do not fit every sheet properly.

Combinations of Standard Paper Sizes in a Mixed Batch

Refer to the table below for a guideline of the range available for mixed batch scanning.

Document Size Width (mm) (*1)			Maximum Size												
			A3 (P) A4 (L)	DL (P) LTR (L)	B4 (P) B5 (L)	LTR (P) A3-CS	A4 (P) A5 (L)	B5 (P) B6 (L)	A5 (P) A6 (L)	B6 (P) B7 (L)	A6 (P) A7 (L)	B7 (P) B8 (L)	A7 (P) A8 (L)	B8 (P)	A8 (P)
			297	279	257	216	210	182	149	129	105	91	74.3	64.3	52.5
Minimum Size	A3 (P) A4 (L)	297	■												
	DL (P) LTR (L)	279	■	■											
	B4 (P) B5 (L)	257	■	■	■										
	LTR (P) A3-CS	216	■	■	■	■									
	A4 (P) A5 (L)	210	■	■	■	■	■								
	B5 (P) B6 (L)	182	■	■	■	■	■	■							
	A5 (P) A6 (L)	149			■	■	■	■	■						
	B6 (P) B7 (L)	129				■	■	■	■	■					
	A6 (P) A7 (L)	105				■	■	■	■	■	■				
	B7 (P) B8 (L)	91					■	■	■	■	■	■			
	A7 (P) A8 (L)	74.3						■	■	■	■	■	■		
	B8 (P)	64.3						■	■	■	■	■	■	■	
	A8 (P)	52.5													■

■ Available Range

DL: Double Letter size

LTR: Letter size

A3-CS: Carrier Sheet

***1:** The following figure shows how to set the widest and the narrowest documents of the batch between the side guides.

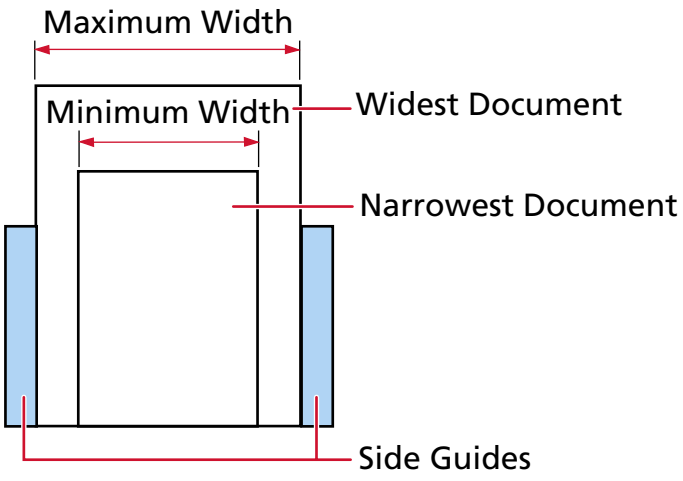

ATTENTION

B8 (portrait) and A8 (portrait) documents cannot be mixed with other sizes in the same batch.

Documents That Cannot Be Scanned in a Mixed Batch

The following types of documents cannot be mixed in the same batch:

- Carbonless paper
- Bond paper
- Perforated documents
- Thermal paper
- Carbon-backed paper
- OHP film
- Tracing paper

Conditions for Automatic Page Size Detection

Page size detection will not work for the following types of documents:

- Non-rectangular documents

Page size detection may also not work for the following types of documents:

- Thin paper (52 g/m^2 [14 lb] or less)
- White documents with glossy edges
- Documents with darkish (gray) edges

Conditions for Using the Carrier Sheet

- **Paper Size**

  The following paper sizes can be scanned:

  - Carrier Sheet (216 × 297 mm)
  - A3 (297 × 420 mm) (*1)
  - A4 (210 × 297 mm)
  - A5 (148 × 210 mm)
  - A6 (105 × 148 mm)
  - B4 (257 × 364 mm) (*1)
  - B5 (182 × 257 mm)
  - B6 (128 × 182 mm)
  - Business card (51 × 89 mm) (*2)
  - Letter (8.5 × 11 in./216 × 279.4 mm)
  - Double Letter (11 × 17 in./279.4 × 431.8 mm) (*1)
  - Custom size
    - Width
      25.4 to 216 mm (1 to 8.5 in.)
    - Length
      25.4 to 297 mm (1 to 11.69 in.)

  ***1:**For documents wider than 216 mm (8.5 in.), fold them in half to scan them.

  ***2:**Available when scanning with PaperStream IP (ISIS) fi-8000 Series.

- **Document Conditions**

  Document Type

  The document types (paper types) are as follows:

  - Standard office paper
  - Documents larger than A4/Letter size
  - Documents that can be damaged quite easily such as photographs
  - Documents that might cause paper jams such as clippings

  Paper Weight (Thickness)

  Documents with the following paper weights (thickness) can be scanned:

  - Up to 209 g/m^2 (56 lb)

  When scanning documents that are folded in half, the acceptable paper weight is as follows:

  - Up to 105 g/m^2 (28 lb)

- **Precautions for Using/Storing the Carrier Sheet**

  Precautions for Using the Carrier Sheet

  - Up to three Carrier Sheets can be loaded at once.
  - Depending on the image scanning application, there may be insufficient memory to perform a [Double-page spread] scan using the Carrier Sheet in high resolution.
    In that case, specify a lower resolution and try scanning again.
  - Do not write on, color, stain, or cut the end with a black and white pattern on the Carrier Sheet.
    Otherwise, the Carrier Sheet may not be recognized correctly.
  - Do not load the Carrier Sheet upside down.
    Otherwise, a paper jam may occur and damage the Carrier Sheet and the document inside.

    ➡ Scanning Documents That Can Be Damaged Quite Easily without Damaging Them (page 146)
  - As you keep using the Carrier Sheet, dirt and dust will accumulate on the surface and the inside.
    Clean it regularly because it may cause problems related to scanning or affect the scanned results.

    ➡ Cleaning the Carrier Sheet (page 184)
    If the problem still persists, replace the Carrier Sheet.
  - Do not fold or pull the Carrier Sheet.
  - Do not use a damaged Carrier Sheet.
    Doing so may damage or cause the scanner to malfunction.
  - Do not slide your finger on the edge of the Carrier Sheet.
    Doing so may cut your finger.
  - If paper jams occur frequently, feed about 50 sheets of PPC paper (recycled paper) before scanning with the Carrier Sheet.
    The PPC paper can either be blank or printed.
  - Paper jams may occur when several small documents (such as photos or postcards) are placed in the Carrier Sheet for scanning.
    It is recommended to place only one document at a time in the Carrier Sheet.
  - Do not place a booklet (such as a passport) in the Carrier Sheet for scanning.
    Doing so may cause a paper jam.
  - Do not use a Carrier Sheet in high-temperature environments.

  Precautions for Storing the Carrier Sheet

  - Do not leave a document inside the Carrier Sheet for a long time.
    Otherwise, the ink on the document may be transferred onto the Carrier Sheet.
  - Do not leave the Carrier Sheet in high temperature places such as under direct sunlight or near a heating apparatus for a long time.

Otherwise, the Carrier Sheet may deform.

- To avoid deformation, keep the Carrier Sheet on a flat surface without any weight on it.

How to Use the Operator Panel

This section explains how to use the operator panel.

Operator Panel Overview

The operator panel consists of an LCD and buttons.

ATTENTION

Do not use the operator panel while Software Operation Panel is running.

Names and Functions of the Operator Panel

- fi-8600

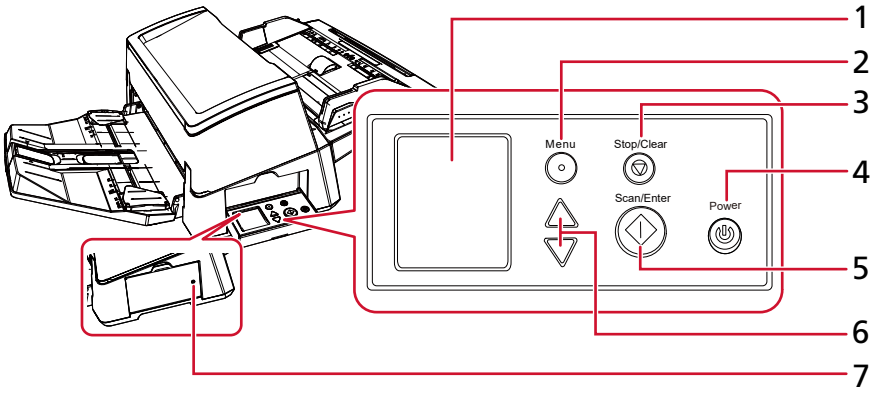

- fi-8700/fi-8700S

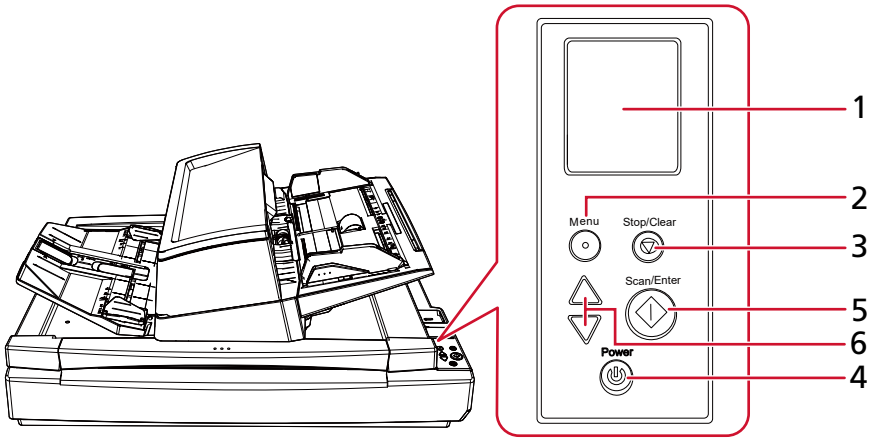

No.	Name	Function
1	LCD	Displays the status of the scanner and the menu used for configuring the settings for the operations of the scanner.

No.	Name	Function
		When the scanner enters power saving mode, the LCD turns off.
2	[Menu] button	Displays the menu used for configuring the settings for the operations of the scanner on the LCD. This button is also used to switch operations during scanning.
3	[Stop/Clear] button	Stops scanning. This button is also used to clear an error on the screen of the LCD, return to the previous screen while configuring the scanner, and clear the page counter (when pressed down for three seconds or longer).
4	[Power] button	Turns the power ON/OFF. Lights in green when the scanner is on. Flashes in green when the scanner enters power saving mode.
5	[Scan/Enter] button	Starts scanning. Pressing this button during scanning pauses the scan. This button is also used to eject a document or configure settings for the operations of the scanner on the LCD.
6	[△] button/[▽] button	These buttons are used to move the cursor, scroll up/down, and set a number in the screen on the LCD.
7	Status indicator (LED)	Allows you to check whether the scanner is on even when the operator panel is fitted into the side. Lights in green when the scanner is on. Turns off when the scanner is off.

Indications on LCD

Indication	Description
	This screen appears during the initialization process.
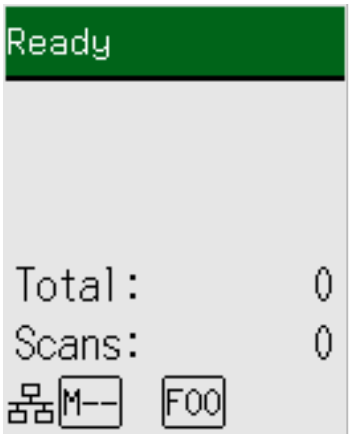	Ready to start scanning. Indicates that the initialization was successfully completed. ➔ Names and Functions of the Indicator (page 106)
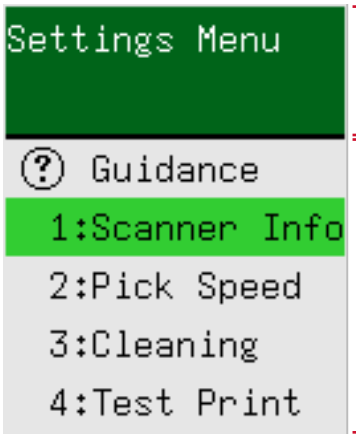	This screen is used to configure settings for operations of the scanner. When you press the [Menu] button while the [Ready] screen is displayed, the [Settings Menu] screen appears. The Settings Menu can be used to configure various operational settings upon scanning. ➔ How to Use the Settings Menu (page 109)

Indication	Description
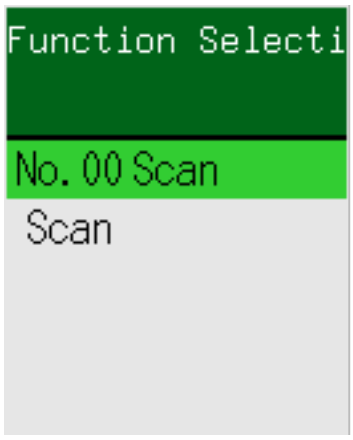	This screen is used to select an action to be taken when starting a scan by pressing the [Scan/Enter] button. Select an action when a button on the computer is configured to start up an image scanning application. When you press the [△] button/[▽] button in the [Ready] screen, the [Function Selection] screen is displayed. By using Function Selection, you can configure an image scanning application to be started up when the [Scan/Enter] button is pressed in the [Ready] screen. ➔ How to Use Function Selection (page 134)
	This screen appears when an error occurred during scanning. An error code beginning with the letter "J", "M", or "U" is displayed. ➔ Errors (page 201) You can clear the error display by pressing the [Stop/Clear] button. Note that for a paper jam error, the message disappears after a certain amount of time elapses with no documents ([Ready] status) in the scanner.
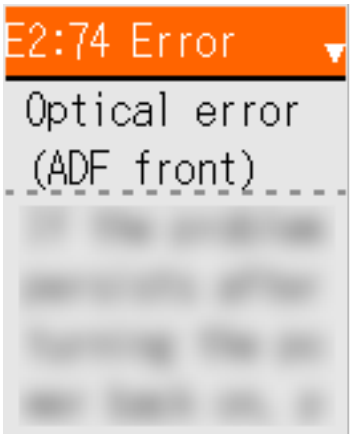	This screen appears when an error occurred on the scanner itself. Error codes beginning with the letter "A", "C", "E", "F", "H", "L", or "M" are displayed. ➔ Errors (page 201) When this screen appears, turn the power off then back on. If the problem still persists, write down the error code, check each item in Before You Contact the Scanner Service Provider (page 256) and then contact the distributor/ dealer where you purchased this product.

Indication	Description
	If the scanner is not operated for the length of time that is set for the sleep interval, it enters power saving mode. Press any button on the scanner (except the [Power] button) to resume from power saving mode.

Names and Functions of the Indicator

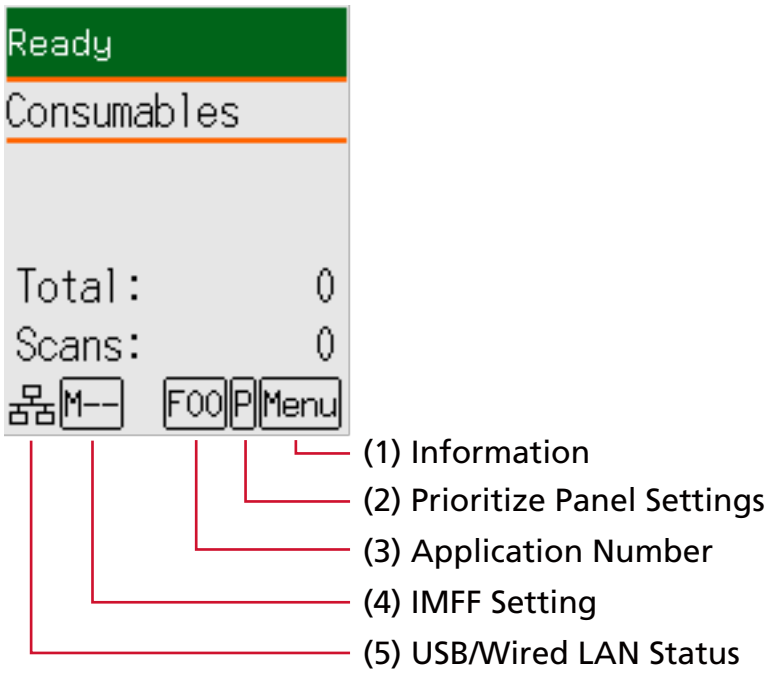

(1) Information

Menu flashes when there is a message for replacing consumables/cleaning/glass cleaning/regular maintenance.
[Consumables], [Cleaning], [Clean glass!], or [maintenance] also flashes on the second line in the [Ready] screen.
Press the [Menu] button and select [Information].

For instructions on when Menu flashes, refer to How to Use the Settings Menu (page 109).

(2) Prioritize Panel Settings

P appears when the operator panel settings are prioritized over the Software Operation Panel settings.

➡ How to Use the Settings Menu (page 109)

(3) Application Number

Displays the number for the application that you want to launch when you press the [Scan/Enter] button while the [Ready] screen is displayed.

➡ How to Use Function Selection (page 134)

(4) iMFF Setting

Displays the iMFF setting as follows:

Icon	Operation Mode
M--	Manual mode
A1-00	Auto mode 1
A2-00	Auto mode 2

In Manual mode, M-- is displayed at all times.

In Auto mode 1 and Auto mode 2, it displays the number of overlap patterns memorized.
The number of overlap patterns that can be memorized depends on the operation mode that is described below:

- For Auto mode 1
  Overlap patterns can be memorized for up to eight sheets (up to four overlap patterns can be memorized per sheet).
  Once overlap patterns have been memorized for eight sheets, the memorized patterns will be overwritten by any newly detected patterns starting from the first sheet that was memorized.
  However, when the scanner is turned off and on, the number of memorized overlap patterns depends on the setting for [Overlap patterns at power-off] in Software Operation Panel.

  ➡ Setting to Ignore Certain Overlap Patterns [Intelligent Multifeed Function] (page 314)

  TIP

  If you want the scanner to memorize five or more overlap patterns for a document, scan the document once for the scanner to memorize up to four overlap patterns, then scan the document again for the scanner to memorize the fifth and subsequent overlap patterns so that the newly memorized overlap patterns will not be detected as overlapping from the next scan.
  Because the same document is scanned twice, the scanner effectively memorizes it as two documents.

- For Auto mode 2
  Only one overlap pattern can be memorized in this operation mode.

For details about the iMFF setting, refer to How to Use the Settings Menu (page 109).

(5) USB/wired LAN Status

The USB/wired LAN status is displayed as follows.

Icon	Connection Status via a USB Cable	Connection Status via a LAN Cable (*1)	Network Function Setting (*2)
	Connected	Connected	Enable

Icon	Connection Status via a USB Cable	Connection Status via a LAN Cable (*1)	Network Function Setting (*2)
	Connected	Connected	Disable
	Connected	Not connected	Disable
	Connected	Not connected	Enable
	Not connected	Connected	Enable
	Not connected	Not connected	Enable
None	Not connected	Connected	Disable
	Not connected	Not connected	Disable

***1:**If no communication takes place even if the LAN cable is connected, it is regarded as "Not connected".

***2:**When the network function is disabled, the wired LAN status does not appear.
For information on how to configure the network settings, refer to Settings to Use the Scanner Only via the USB Connection [Network Function] (page 320).

How to Use the Settings Menu

This section explains the Settings Menu.
When you press the [Menu] button while the [Ready] screen is displayed, the [Settings Menu] screen appears.
The Settings Menu can be used to configure various operational settings upon scanning.
There are two menus in the [Settings Menu] screen.

- User menu
  You can configure basic settings for operating the scanner and using the operator panel.

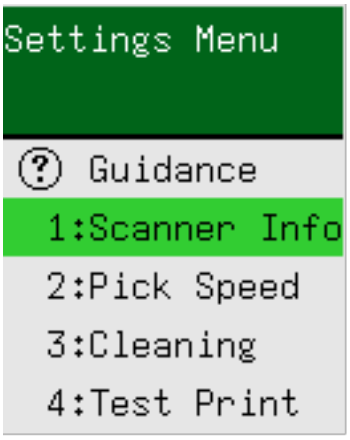

- Administrator menu
  You can configure advanced settings for operating the scanner and using the operator panel.

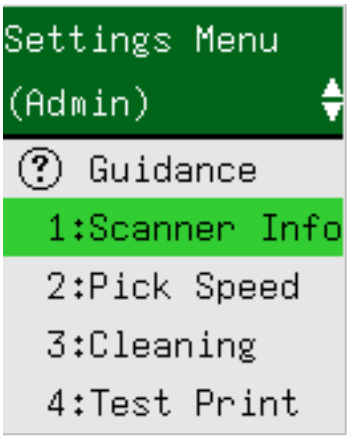

To switch between the menus, press down both the [△] and [▽] buttons at the same time for three seconds or longer while the [Settings Menu] screen is displayed.
If the menu does not switch, release the buttons and press them down again.
When the scanner is turned off, the menu is switched to the user menu.
This section explains how to use the Settings Menu of the operator panel according to the following categories.

Operation	Description	Setting Item	User Menu	Administrator Menu
			○: Available —: Not Available	
Checking the guidance contents	You can check the way to clear the page counter. ➡ Checking the Guidance Contents (page 113)	Guidance	○	○
Checking the information	Menu flashes on the LCD when there is a message for replacing consumables/ cleaning/glass cleaning/regular maintenance. Read the message and take measures accordingly. ➡ Checking the Information (page 115)	Information	○	○
Checking the scanner information	You can check the scanner information such as the scanner name and network information. ➡ Checking the Scanner Information (page 117)	1:Scanner Information	○	○
Operational settings for the scanner	You can configure various settings for operating the scanner and using the operator panel. Also, you can check the certification. ➡ Operational Settings for the Scanner (page 119)	2:Pick Speed	○	○
		6:Language	○	○
		7:Brightness	○	○
		8:Check Blink Speed	○	○
		9:LCD Scroll Speed	○	○
		10:Low-speed Feed Mode	○	○
		11:Stacking Control	○	○
		12:Certification	○	○
		14:iMFF Setting	—	○
		15:No. of Paper Feed Retries	—	○
		16:Pick pressure	—	○

Operation	Description	Setting Item	User Menu	Administrator Menu
			○: Available —: Not Available	
		17:Manual/ Continuous Feed Setting	—	○
		18:Manual Feed Timeout	—	○
		19:Paper Protection	—	○
		20:Vertical streak detection	—	○
		21:Prioritize panel settings	—	○
		22:Ope. Panel Initialization	—	○
		23:Power saving	—	○
		24:Power-off time	—	○
		25:Pre-pick	—	○
		26:Overscan Control	—	○
		27:USB	—	○
Cleaning the scanner	You can clean the scanner by using Cleaning Paper, Cleaning Wipe, or cloth. ➔ Daily Care (page 168)	3:Cleaning	○	○
Test print for Imprinter	You can run a test print when the imprinter is installed. For more details, refer to the fi-760PRB Imprinter Operator's Guide.	4:Test Print	○	○
Checking and clearing the consumable counters	You can check the replacement cycle of the consumables and the total page count. Also use it to clear the counter when you have replaced the consumables or performed cleaning.	5:Consumable counters	○	○

Operation	Description	Setting Item	User Menu	Administrator Menu
			○: Available —: Not Available	
	➡ Checking and Clearing the Consumable Counters (page 121)			
Counting documents	You can count the number of sheets scanned. ➡ Counting Documents (page 123)	13:Doc Counting Mode	○	○

Checking the Guidance Contents

1 Turn on the scanner.

➡ How to Turn the Power ON (page 44)

The [Ready] screen is displayed on the LCD.

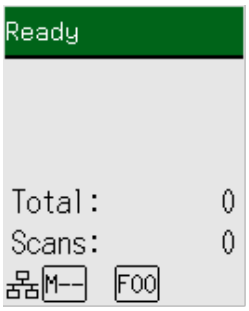

2 Press the [Menu] button, press the [△]/ [▽] button to select [Guidance], and then press the [Scan/Enter] button.

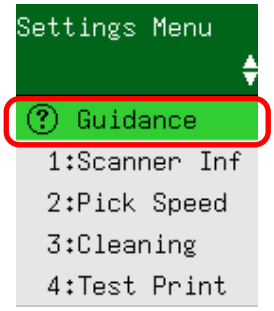

3 Press the [△]/[▽] button to select [1:Clear counter], and then press the [Scan/Enter] button.

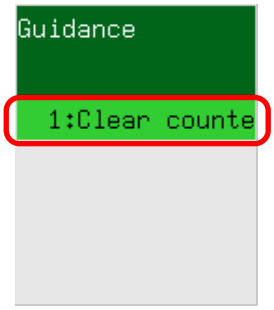

4 Press the [△]/[▽] button and check the contents of the guidance.

You can check the way to clear the page counter.

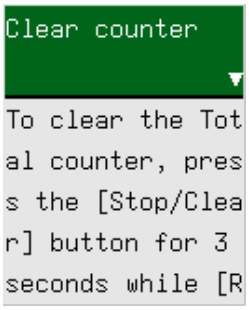

Checking the Information

1 Turn on the scanner.

➡ How to Turn the Power ON (page 44)

The [Ready] screen is displayed on the LCD.

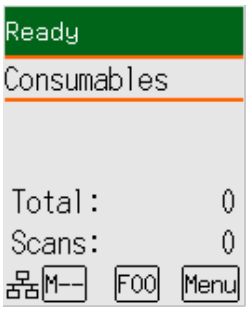

2 Press the [Menu] button, press the [△]/ [▽] button to select [Information], and then press the [Scan/Enter] button.

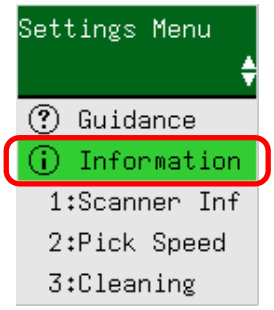

ATTENTION

[Information] can be selected only when there is a message for replacing consumables/cleaning/glass cleaning/regular maintenance.

3 Press the [△]/[▽] button and check the contents of the information.

You can check messages for consumable replacement/cleaning/glass cleaning/maintenance. When the message prompts replacing consumables/cleaning, the corresponding counter that requires consumable replacement/cleaning is highlighted.

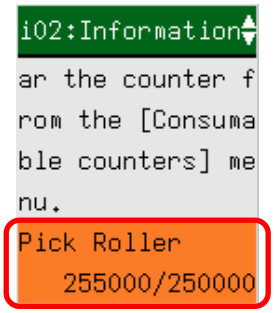

Counters will appear highlighted when:

- The page count after the consumable is replaced reaches 95% of the value configured in Specifying the Cycle to Replace Consumables [Life Counter Alarm Setting] (page 282) in Software Operation Panel. (For the brake roller/pick roller counters)
- The page count after cleaning reaches the value configured in Scanner Cleaning Cycle [Cleaning Cycle] (page 281) in Software Operation Panel. (For the cleaning counter)
- The amount of remaining ink is below 33%. This is only displayed when the imprinter is installed. (For the ink counter)

4 Take measures according to the contents of [Information].

Follow the instructions in the message if it prompts consumable replacement/cleaning/glass cleaning.

For details about replacing consumables, refer to the following:

- Replacing the Pick Roller (page 191)
- Replacing the Brake Roller (page 187)

For details about cleaning, refer to Daily Care (page 168).

If the message prompts regular maintenance, please have the scanner checked by a service engineer for regular maintenance/inspection.

For regular maintenance and inspection on the scanner by a service engineer, contact the distributor/dealer where you purchased this product.

Checking the Scanner Information

1 Turn on the scanner.

➡ How to Turn the Power ON (page 44)

The [Ready] screen is displayed on the LCD.

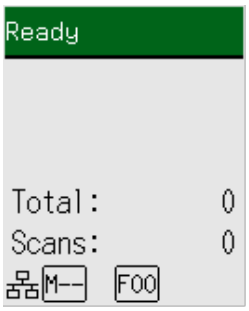

2 Press the [Menu] button, press the [△] button/[▽] button to select [1:Scanner Information], and then press the [Scan/Enter] button.

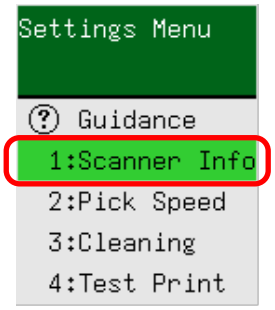

3 Press the [△] button/[▽] button to select [1:Scanner Name] or [2:Network], and then press the [Scan/Enter] button.

In this example, [1:Scanner Name] is selected.

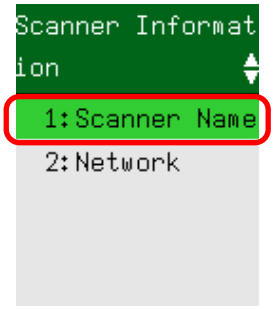

4 Check the contents of the selected item.

In this example, the indicator displays a scanner name because [1:Scanner Name] is selected.



Operational Settings for the Scanner

1 Turn on the scanner.

➡ How to Turn the Power ON (page 44)

The [Ready] screen is displayed on the LCD.

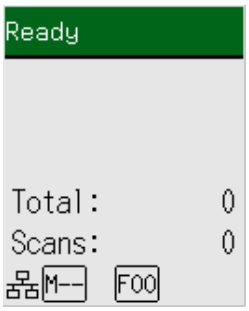

2 Press the [Menu] button, press the [△] button/[▽] button to select a setting item, and then press the [Scan/Enter] button.

In this example, [2:Pick Speed] is selected.

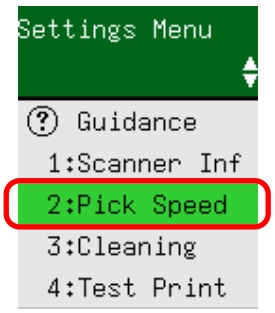

➡ Configurable Items in the Settings Menu (page 125)

3 Press the [△] button/[▽] button to select a parameter, and then press the [Scan/Enter] button.

The factory default setting is marked with "*".
The current setting is marked with ">".
If the current setting is the same as the factory default setting, the "*" mark does not appear, and only the ">" mark appears.
In this example, [1:Normal] is selected.

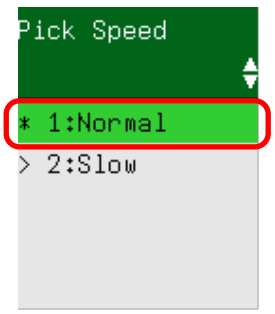

If the [Settings Menu] screen is displayed on the LCD, it indicates that the setup has been completed.
If the LCD displays a screen with setting items, repeat step 3 until it shows the [Settings Menu] screen.

Checking and Clearing the Consumable Counters

1 Turn on the scanner.

➡ How to Turn the Power ON (page 44)

The [Ready] screen is displayed on the LCD.

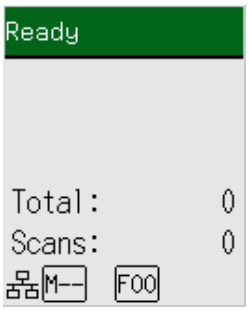

2 Press the [Menu] button, press the [△]/[▽] button to select [5:Consumable counters], and then press the [Scan/Enter] button.

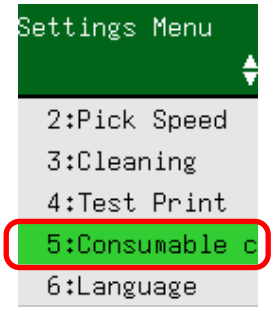

3 Press the [△]/[▽] button and check the counter.

Counters are highlighted when consumable replacement or cleaning is required.

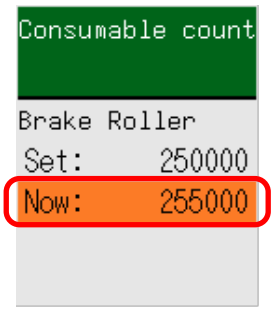

Counters will appear highlighted when:

- The page count after the consumable is replaced reaches 95% of the value configured in Specifying the Cycle to Replace Consumables [Life Counter Alarm Setting] (page 282) in Software Operation Panel. (For the brake roller/pick roller counters)
- The page count after cleaning reaches the value configured in Scanner Cleaning Cycle [Cleaning Cycle] (page 281) in Software Operation Panel. (For the cleaning counter)

- The amount of remaining ink is below 33%. This is only displayed when the imprinter is installed. (For the ink counter)

The total number of sheets scanned is displayed in total count. Total count cannot be cleared.

4 After replacing the consumables or cleaning, press the [△]/[▽] button to select the highlighted counter, and then press the [Scan/Enter] button.

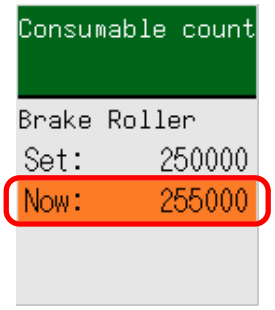

A message appears to confirm that you want to clear the counter.

5 Press the [△] button/[▽] button to select [1:Yes], and then press the [Scan/Enter] button.

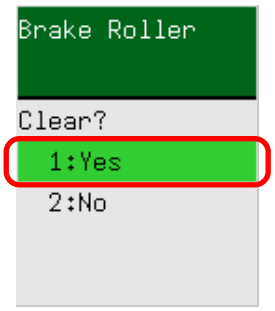

The counter is reset to 0.

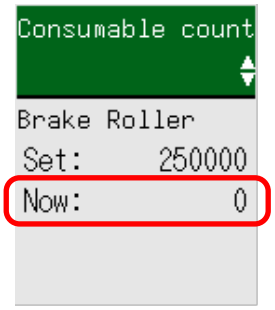

For remaining ink, it is reset to 100.

Counting Documents

The number of documents can be counted without outputting images of the documents.
This operation is useful for checking the number of documents when you scan a large number of documents.
Document sizes up to Double Letter size (11 × 17 in., 279.4 × 431.8 mm) are supported.

1 Turn on the scanner.

➡ How to Turn the Power ON (page 44)

The [Ready] screen is displayed on the LCD.

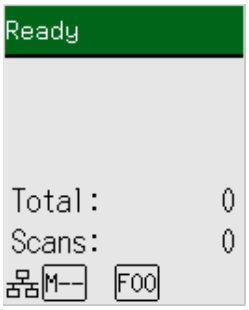

2 Press the [Menu] button, press the [△]/[▽] button to select [13:Doc Counting Mode], and then press the [Scan/Enter] button.

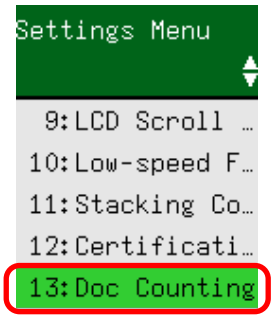

The [Doc Counting Mode (More documents)] screen is displayed on the LCD.

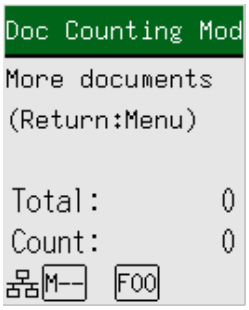

3 Load documents in the ADF paper chute (feeder), and press the [Scan/Enter] button.

The scanned documents are counted.

The number of counted sheets is displayed in [Count].

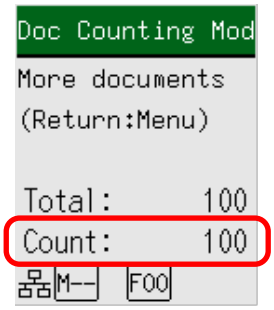

To clear [Count], press the [Stop/Clear] button while the [Doc Counting Mode (More documents)] screen is displayed.
To end Doc Counting Mode, press the [Stop/Clear] button for three seconds or longer while the [Doc Counting Mode (More documents)] screen is displayed.

ATTENTION

Documents may not be counted correctly if overlapped documents are detected during scanning.

Configurable Items in the Settings Menu

Setting Item	Description	Parameter(*1)/Value	Factory Default (*2)
		- : No parameters/values	
Guidance	Displays the way to clear the page counter.	1:Clear counter	1:Clear counter
Information	[Information] appears as an item in the [Settings Menu] screen that is flashing on and off, only if Menu is flashing on the LCD.	Message for replacing consumables/cleaning/glass cleaning/regular maintenance	Only displayed when there is information
1:Scanner Information	Displays the scanner information such as the scanner name and network information.	1:Scanner Name 2:Network	—
2:Pick Speed	Specify the timing of when document feeding is started. When overlapped documents or paper jams occur frequently, delaying the timing of document feeding may improve the performance. This setting is effective when you scan thin paper. This setting can also be configured in Software Operation Panel.	1:Normal 2:Slow	1:Normal
3:Cleaning	Use this setting when you clean the scanner. For more details, refer to Daily Care (page 168).	1:Cleaning Paper 2:Roller Wipe	—
4:Test Print	Use this option to run a test print when the Imprinter is installed. For more details, refer to the fi-760PRB Imprinter Operator's Guide.	**No. of sheets scanned:** 1:Single sheet only 2:Multiple sheets **Print Pattern:** 1: (L)ABCDEFGHIJKLMNOPQRSTUVWXYZ[¥]^_`00000000 2: (L)abcdefghijklmnopqrstuvwxyz{|}¯00000000	(*3)

Setting Item	Description	Parameter(*1)/Value	Factory Default (*2)
		- : No parameters/values	
		3:(L)!"#$%&'()*+,-.V 0123456789:;<=>? @00000000 4: (P)ABCDEFGHIJKLMNO PQRSTUVWXYZ[¥]^_`00000000 5: (P)abcdefghijklmnopqr stuvwxyz{\|}¯00000000 6:(P)!"#$%&'()*+,-./ 0123456789:;<=>? @00000000 **Test Print:** 1:Yes 2:No	
5:Consumable counters	The status of each consumable part can be viewed to determine when to replace or clean the consumables. When you have replaced or cleaned a consumable part, clear the corresponding counter. This setting can also be checked and cleared in Software Operation Panel.	Total sheets scanned/ Brake Roller/Pick Roller/Cleaning	0
		Remaining Ink (when the imprinter is installed)	Only displayed when imprinter is installed
6:Language	Specify the language in which data is displayed.	1:Japanese 2:English 3:French 4:German 5:Italian 6:Spanish 7:Russian 8:Chinese (S) 9:Chinese (T) 10:Portuguese 11:Turkish 12:Korean 13:Arabic	2:English
7:Brightness	Specify the brightness for the LCD.	Weak ←→ Strong ■□□□□	■■■□□

Setting Item	Description	Parameter(*1)/Value	Factory Default (*2)
		- : No parameters/values	
		■■□□□ ■■■□□ ■■■■□ ■■■■■	
8:Check Blink Speed	Specify an interval between each flash for Menu and [Information] in the [Settings Menu] screen when Menu is flashing on the LCD.	0.5, 1.0, 1.5, 2.0, 2.5 (seconds)	2.0
9:LCD Scroll Speed	Specify the speed at which the display is horizontally scrolled. The displayed item is scrolled horizontally when the text does not fit in the LCD.	1:Fast 2:Normal 3:Slow 4:OFF	2:Normal
10:Low-speed Feed Mode	Specify this to slow down the scanning speed in order to protect the documents. When performing a scan at a low resolution (lower than 400 dpi), the scan is performed at a slow speed regardless of the resolution that is set. This setting is effective for scanning long page documents. This setting can also be configured in Software Operation Panel.	1:Enable 2:Disable	2:Disable
11:Stacking Control	This option allows you to slow down the ejecting speed when documents are ejected, preventing scanned documents from scattering. This setting can also be configured in Software Operation Panel.	1:Enable 2:Disable	2:Disable
12:Certification	Displays logos.	—	—
13:Doc Counting Mode	You can count the number of sheets scanned.	—	—

Setting Item	Description	Parameter(*1)/Value	Factory Default (*2)
		- : No parameters/values	
14:iMFF Setting	Configure the setting to automatically ignore certain patterns of overlapped documents when the setting to detect overlapped documents is enabled. Note that you first need to specify [Check Overlapping(Ultrasonic)] or [Check Overlapping and Length] in the scanner driver and in Software Operation Panel (Specifying a Method to Detect Overlapped Documents [Multifeed] (page 305)) before setting this item. When you select [4:Clear pattern], you can erase the overlap patterns (length and location) that were memorized in Auto mode. This setting can also be configured in Software Operation Panel.	1:Manual mode 2:Auto mode 1 3:Auto mode 2 4:Clear pattern	1:Manual mode
15:No. of Paper Feed Retries	Specify the number of feeding retries when a document is not fed from the ADF paper chute (feeder). This setting can also be configured in Software Operation Panel.	1 to 12 (times)	3
16:Pick pressure	Set the pick pressure for feeding paper. This setting can also be configured in Software Operation Panel.	1:Weak 2:Normal 3:Strong	2:Normal
17:Manual/ Continuous Feed Setting	Specify this to continue loading and scanning documents repeatedly after starting scanning. To configure the scanner to wait for a document to be loaded onto the ADF paper chute (feeder) for a specified waiting time after scanning is started or document feeding is complete, specify the waiting time. This enables continuous scanning as long as you load a document within the specified waiting time.	1:Enable 2:Disable	2:Disable

Setting Item	Description	Parameter(*1)/Value	Factory Default (*2)
		- : No parameters/values	
	If the specified waiting time is exceeded, the scan is finished automatically. This setting can also be configured in Software Operation Panel.		
18:Manual Feed Timeout	Specify a waiting time for scanning documents manually. This setting can also be configured in Software Operation Panel.	5, 10, 20, 30, 40, 50, 60, 70, 80, 90, 100, 110, 120, 180, 240, 300, 360, 420, 480, 540, 600, 900, 1200, 1500, 1800, 1999 (seconds)	10
19:Paper Protection	Configure the setting to detect feeding errors. This function detects feeding errors in the following cases: ● When the scanner detects a document that was abnormally warped by a feeding error ● When the scanner detects paper jam noise Paper jams due to feeding errors could damage or tear valuable documents. Detecting a document feeding error and stopping the feed can prevent damage to the document. This function is effective when you scan documents which are difficult to feed such as thin paper documents. Specify the sensitivity level for detecting feeding errors when the paper protection function is enabled. Documents become abnormally warped or a paper jam noise is made when documents are not fed properly. Specify the sensitivity level for detecting abnormal document warping or paper jam noise.	1:Disable 2:Feeding accuracy 3:Feeding noise 4:Feeding accuracy and noise **Sensitivity for feeding accuracy:** 1:Low 2:Normal 3:High **Sensitivity for feeding noise:** 1:Low 2:Normal 3:High	2:Feeding accuracy **Sensitivity for feeding accuracy:** 2:Normal **Sensitivity for feeding noise:** 2:Normal

Setting Item	Description	Parameter(*1)/Value	Factory Default (*2)
		- : No parameters/values	
	The paper protection setting can also be configured in the scanner driver or Software Operation Panel. Note that priority is given to the scanner driver setting. When the paper protection setting is set to on in the scanner driver, [Feeding Accuracy & Noise] is enabled regardless of the settings of the operator panel and Software Operation Panel. Note that when the operator panel settings take priority, the paper protection settings are applied in the following order. **1** Scanner driver For details, refer to the help for the scanner driver. **2** [19:Paper Protection] on the [Settings Menu] screen of the operator panel ➡ How to Use the Settings Menu (page 109) **3** Software Operation Panel ➡ Settings for the Paper Protection Function [Paper Protection] (page 293) Sensitivity can also be configured in Software Operation Panel.		
20:Vertical streak detection	You can configure the settings for detecting dirt on the glass. Vertical streaks may appear on images if the glass is dirty. When [Enable] is selected for the vertical streak detection setting, a message is displayed at the following times if vertical streaks may appear on	1:Enable 2:Disable **Sensitivity:** 1:Low 2:Normal 3:High	2:Disable **Sensitivity:** 2:Normal

Setting Item	Description	Parameter(*1)/Value	Factory Default (*2)
		- : No parameters/values	
	the image that you scanned with the ADF: ● When the ADF is opened or closed ● When scanning is finished ● When a document is loaded in the ADF paper chute (feeder) ● When the scanner wakes up from power saving mode A message appears as follows. ● Menu flashes on the LCD. [Clean glass!] also flashes on the second line in the [Ready] screen. To prevent vertical streaks from appearing on images, check the information and then clean the glass. For details about how to check the information, refer to Checking the Information (page 115). ● A message is displayed in Error Recovery Guide on the computer connected to the scanner. To prevent vertical streaks from appearing on images, check the message and then clean the glass. For details about cleaning, refer to Daily Care (page 168). Specify the sensitivity level to detect vertical streaks (dirt on the glass) when [Enable] is selected for [Vertical Streak Detection]. Adjust the sensitivity level according to how dirty the glass is. This setting can also be configured in Software Operation Panel.		
21:Prioritize panel settings	For the paper protection setting, prioritize the operator panel setting	1:Paper Protection 2:Clear	2:Clear

Setting Item	Description	Parameter(*1)/Value	Factory Default (*2)
		- : No parameters/values	
	over the Software Operation Panel setting. You cannot prioritize the setting over the scanner driver setting. When [1:Paper Protection] is selected, the Paper Protection setting of the operator panel is prioritized. When [2:Clear] is selected, the Paper Protection setting is no longer prioritized.		
22:Ope. Panel Initialization	Initialize the settings of the operator panel, except for the language setting and any items without a factory default setting.	1:Yes 2:No	(*4)
23:Power saving	Specify the waiting time before the scanner enters power saving mode. This setting can also be configured in Software Operation Panel.	5 to 115 (in increments of 5) (minutes)	15
24:Power-off time	Specify a time for the scanner to turn off automatically. When [Disabled] is set, the scanner's energy consumption will increase. This setting can also be configured in Software Operation Panel.	20, 1, 2, 4, 8, Disable (Unit: 20 in minutes; 1, 2, 4, and 8 in hours)	20
25:Pre-pick	Specify this to shorten the scanning time when scanning more than one document. "Pre-pick" refers to feeding the next document into the ADF before ejecting the current document being scanned. This setting can also be configured in the scanner driver or Software Operation Panel. Note that priority is given to the scanner driver setting.	1:Yes 2:No	1:Yes

Setting Item	Description	Parameter(*1)/Value	Factory Default (*2)
		- : No parameters/values	
26:Overscan Control	Specify whether or not to prevent a part of an image from being missing when documents are fed skewed. This setting can also be configured in Software Operation Panel.	1:Normal 2:Expand	1:Normal
27:USB	Change the USB setting if an error occurred on a computer during communication. If this setting is changed, the scanner is restarted. This setting can also be configured in Software Operation Panel.	1:Automatic 2:USB 2.0	1:Automatic

***1:**The current setting is marked with ">".
If the current setting is the same as the factory default setting, the "*" mark does not appear, and only the ">" mark appears.

***2:**The factory default setting is marked with "*".

***3:**Although there is no factory default setting, the settings are configured as follows when you turn on the power: [2:Multiple sheets] for [No. of sheets scanned], [1: (L)ABCDEFGHIJKLMNOPQRSTUVWXYZ[¥]^_`00000000] for [Print Pattern], and [1:Yes] for [Test Print]. Therefore, the setting does not change even when you initialize the settings of the operator panel.

***4:**Although there is no factory default setting, it is set to [2:No] when you turn on the power. Therefore, the setting does not change even when you initialize the settings of the operator panel.

How to Use Function Selection

This section explains the Function Selection.

When you press the [△] button/[▽] button in the [Ready] screen, the [Function Selection] screen is displayed.
By using Function Selection, you can configure an image scanning application to be started up when the [Scan/Enter] button is pressed in the [Ready] screen.
A button on the computer must be configured to start up an image scanning application in advance.

➡ Pressing a Button on the Scanner in order to Start an Image Scanning Application and Perform a Scan (page 64)

The indicator displays the number selected in the [Function Selection] screen.
If you select [No.02] in the [Function Selection] screen, the indicator displays [F02].

1 Turn on the scanner.

➡ How to Turn the Power ON (page 44)

The [Ready] screen is displayed on the LCD.
The indicator displays [F00] when the power has just been turned on.

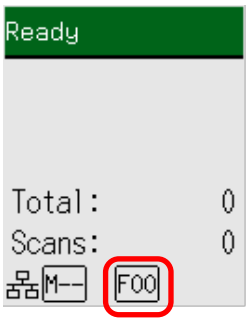

2 Press the [△] button/[▽] button, press the [△] button/[▽] button to select a number that has been configured to start up a desired image scanning application, and then press the [Stop/Clear] button.

In this example, [No.02] is selected.

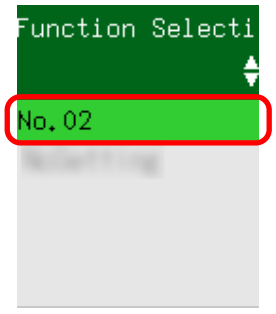

➡ Item Configurable in Function Selection (page 136)

The setup is completed when the LCD displays the [Ready] screen.
The indicator displays the number selected in the [Function Selection] screen.

In this example, the indicator displays [F02] because [No.02] is selected.

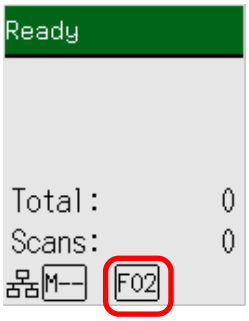

If you select a number from [No.00] to [No.50], a number from [F00] to [F50] that corresponds to the one you selected is displayed on the indicator.
If you select [SOP], the indicator displays [SOP].
Software Operation Panel has been specified for [SOP] to start up by factory default and cannot be changed.

Item Configurable in Function Selection

Setting Item	Description	Setting	Factory Default
Function Selection	You can configure an image scanning application to be started up when the [Scan/Enter] button is pressed in the [Ready] screen. It displays numbers that correspond to the buttons configured on the computer ([Scan Button], from [Send to 01] to [Send to 50]). [No.00] corresponds to [Scan Button] . Numbers from [No.01] to [No.50] correspond to buttons from [Send to 01] to [Send to 50]. [SOP] corresponds to [Software Operation Panel]. For information on how to configure the settings for the button, refer to Pressing a Button on the Scanner in order to Start an Image Scanning Application and Perform a Scan (page 64).	No.00 to No.50/SOP (Software Operation Panel has been specified for [SOP] to start up by factory default and cannot be changed.)	(*1)

***1:** Although there is no factory default setting, it is set to [No.00] when you turn on the power. Therefore, the setting does not change even when you initialize the settings of the operator panel.

Various Ways to Scan Documents

This section explains how to configure the scanner settings and scan different types of documents.
For information on other ways to scan which are not explained here, refer to the help for the scanner driver, and the manual/help for the image scanning application.

Scanning Documents with Different Widths

ATTENTION

When you scan a mixed batch with different widths, some of the narrower documents may be skewed or not fed into the ADF.
In that case, separate the documents by their widths, and scan them in different batches.

1 Check the document requirements for scanning a mixed batch of documents.

➡ Conditions for Mixed Batch Scanning (page 93)

2 Align the top of the documents.

- Align by the center

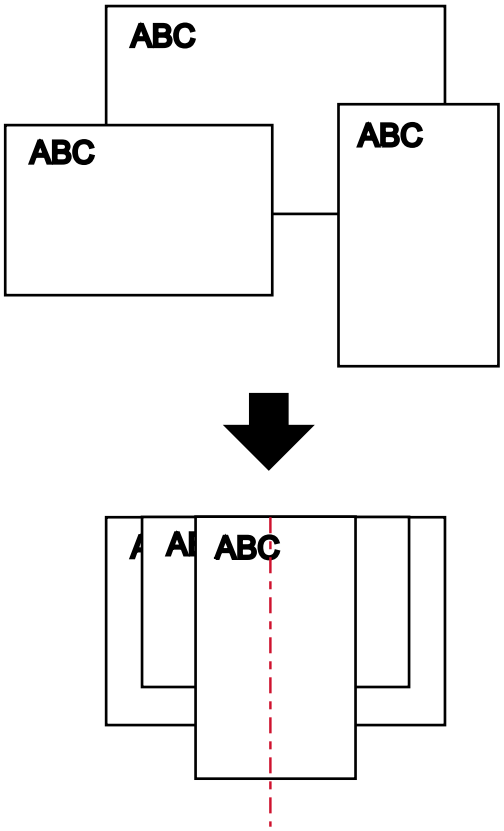

- Align by the side

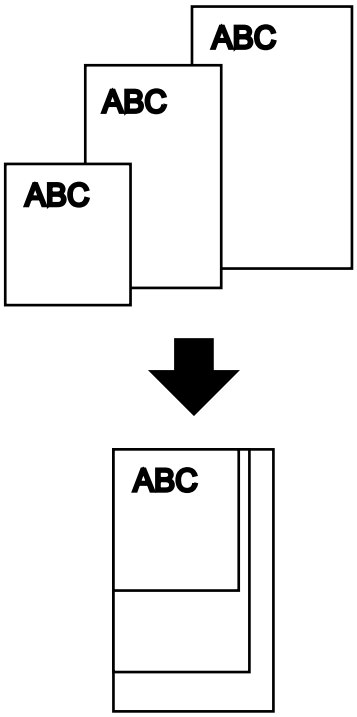

3 Place the documents on the ADF paper chute (feeder), and adjust the side guides to the widest document in the batch.

➡ How to Load Documents in the ADF Paper Chute (Feeder) (page 75)

ATTENTION

Load all documents above the center of the pick roller. If documents are loaded outside of the pick roller width, they may be fed skewed or not fed into the ADF.

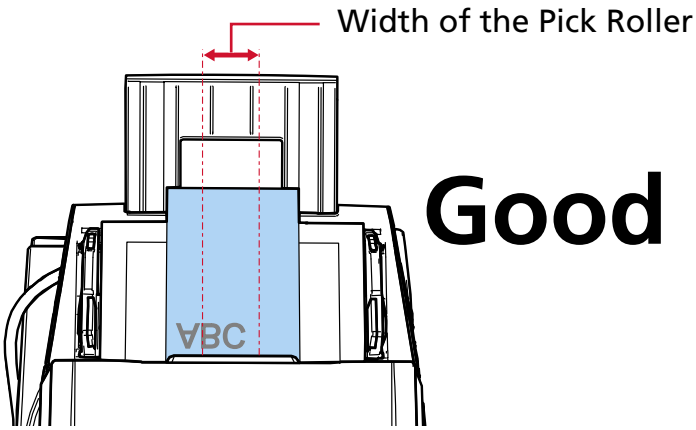

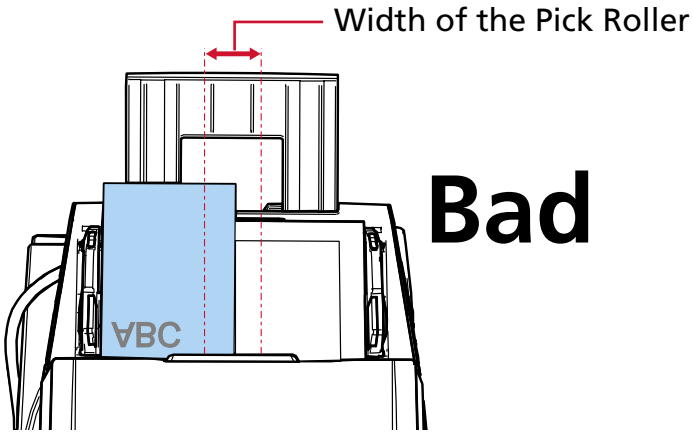

4 **In the scanner driver, configure the scan settings to detect the document size automatically.**
For details, refer to the help for the scanner driver.

5 **Scan documents with the image scanning application.**
For details, refer to the manual/help of the image scanning application.

Scanning Documents Folded in Half

Sliding the feed mode switch to the left to switch the feed mode to Manual Single Mode allows you to scan a document folded in half (a document of up to A1 or A2 size that is folded in half) as it is.

ATTENTION

- The document may be fed skewed if the folded part is too thick.
- Manual Single Mode is the mode for scanning a document folded in half or a multi-layered document such as an envelope.
  Therefore, even if the setting for detecting overlapped documents is enabled, such documents are not detected as overlapped documents.

➡ Specifying a Method to Detect Overlapped Documents [Multifeed] (page 305)

1 Fold the document in half so that the sides to be scanned are facing out.
Fold it firmly and smooth out any creases.
Otherwise, it may cause the document to skew while feeding is in progress and result in a skewed image.

Example 1: A2 size

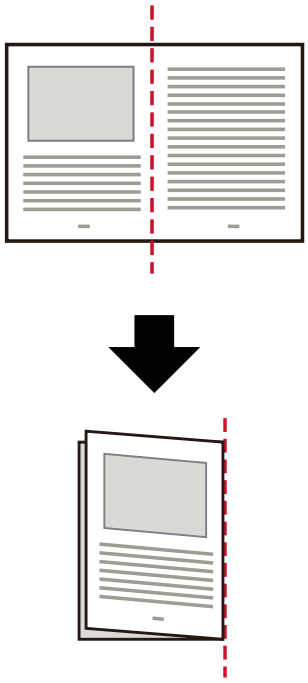

Example 2: A1 size

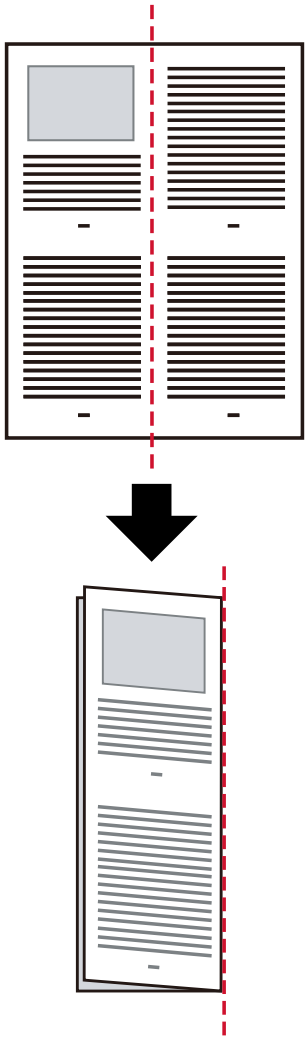

2 Load the document folded in half in the ADF paper chute (feeder).

➔ How to Load Documents in the ADF Paper Chute (Feeder) (page 75)

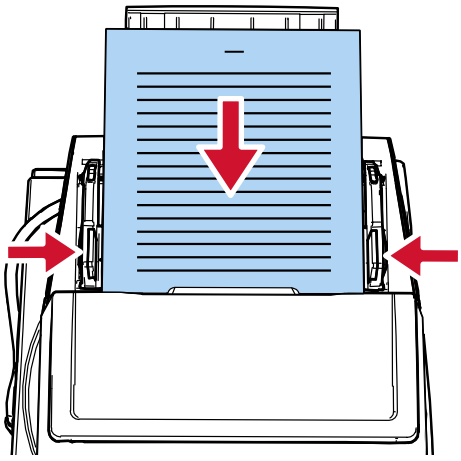

3 Slide the feed mode switch to the left to enable Manual Single Mode.

The scanning speed slows down when the feed mode is switched to Manual Single Mode.

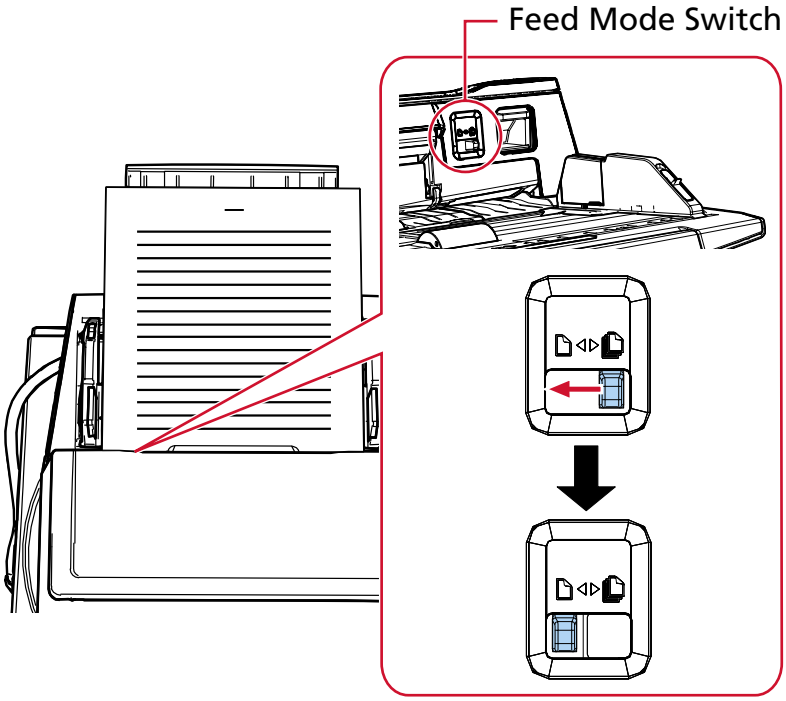

[Manual Feed (Multifeed Detection is disabled)] is displayed on the LCD.

4 Scan the document with the image scanning application.

For details, refer to the manual/help of the image scanning application.

ATTENTION

When scanning an A1 size document folded in half, support the document from below by hand to prevent it from skewing.

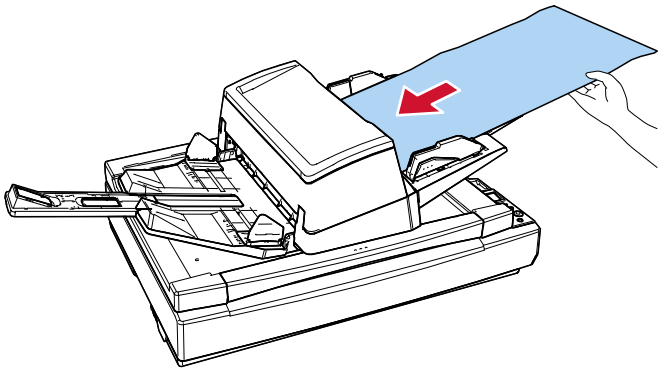

TIP

In Manual Single Mode, the scanner will wait for documents to be loaded in the ADF paper chute (feeder) until the timeout time elapses after scanning is started or a document is ejected.

Scanning will finish if no document is loaded within the timeout time.
Use one of the following methods to set a timeout time.

- [18:Manual Feed Timeout] on the [Settings Menu] screen of the operator panel

  ➔ How to Use the Settings Menu (page 109)

- Software Operation Panel

  ➔ Waiting Time in Manual Feeding [Manual Feeding] (page 318)

Scanning Documents such as Envelopes or Multi-Layered Transfer Paper

Sliding the feed mode switch to the left to switch the feed mode to Manual Single Mode allows you to scan documents such as envelopes and multi-layered transfer paper.

ATTENTION

- For details about the paper weights of the documents that can be scanned, refer to Documents for Scanning (page 83).
- Manual Single Mode is the mode for scanning a document folded in half or a multi-layered document such as an envelope.
  Therefore, even if the setting for detecting overlapped documents is enabled, such documents are not detected as overlapped documents.

  ➡ Specifying a Method to Detect Overlapped Documents [Multifeed] (page 305)

1 Load a document in the ADF paper chute (feeder).

To scan a multi-layered transfer paper, position the bound edge first when loading the paper.

➡ How to Load Documents in the ADF Paper Chute (Feeder) (page 75)

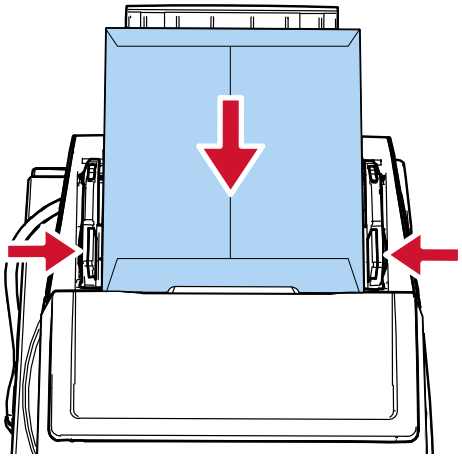

2 Slide the feed mode switch to the left to enable Manual Single Mode.

The scanning speed slows down when the feed mode is switched to Manual Single Mode.

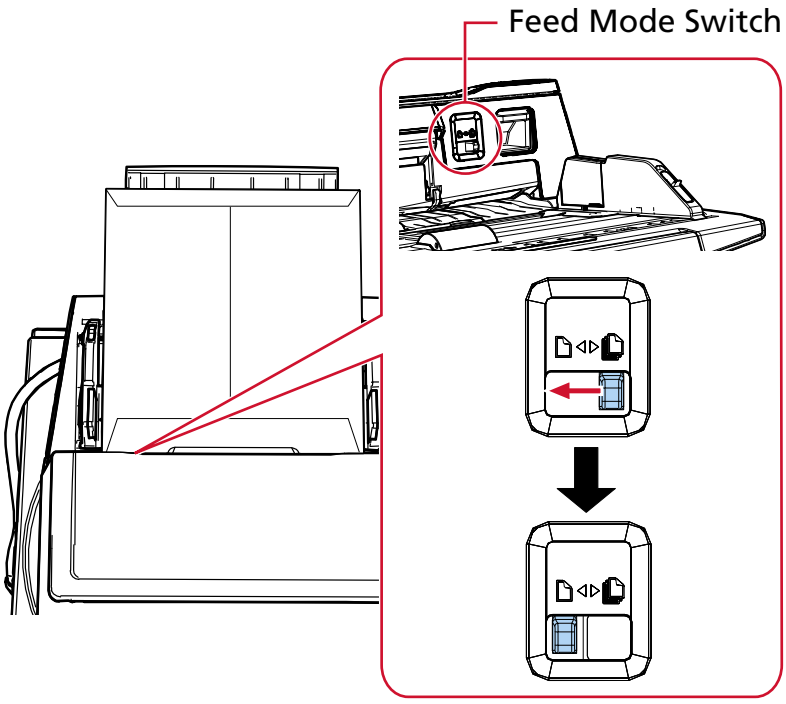

[Manual Feed (Multifeed Detection is disabled)] is displayed on the LCD.

3 Scan the document with the image scanning application.

For details, refer to the manual/help of the image scanning application.

TIP

In Manual Single Mode, the scanner will wait for documents to be loaded in the ADF paper chute (feeder) until the timeout time elapses after scanning is started or a document is ejected. Scanning will finish if no document is loaded within the timeout time.
Use one of the following methods to set a timeout time.

- [18:Manual Feed Timeout] on the [Settings Menu] screen of the operator panel

  ➔ How to Use the Settings Menu (page 109)

- Software Operation Panel

  ➔ Waiting Time in Manual Feeding [Manual Feeding] (page 318)

Scanning Documents That Can Be Damaged Quite Easily without Damaging Them

Using the optional Carrier Sheet allows you to scan documents that can be damaged quite easily without damaging them.
Fold a document larger than A4/Letter size (for example, A3 or B4 size) in half and place it inside the Carrier Sheet.

1 Place the document inside the Carrier Sheet.

a Fold the document in half so that the sides to be scanned are facing out.
Fold it firmly and smooth out any creases.
The document may be fed skewed if the folded part is too thick.

Example

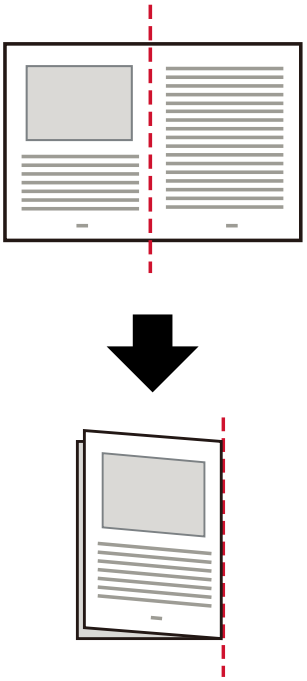

b Open the Carrier Sheet to place the document inside.
Note that the front side of the Carrier Sheet has a black and white pattern at the top and a thick vertical line in the upper right-hand corner.

Align the top and the fold line of the document with the Carrier Sheet so that no space is left in the upper and right sides of the Carrier Sheet.

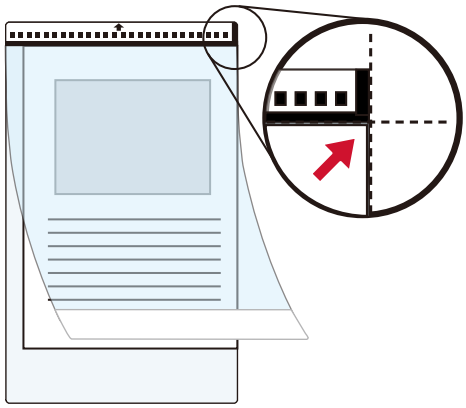

2 **Load the Carrier Sheet with the end with the black and white pattern as the leading edge and with the scanning side facing the ADF paper chute (feeder) (face-down).**
Secure the Carrier Sheet with the side guides to avoid skewing.

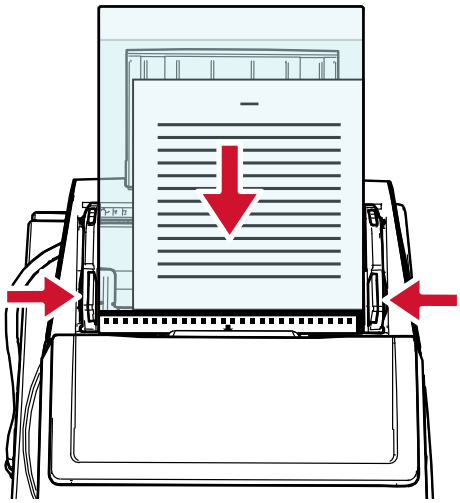

3 **Configure the scan settings in the scanner driver to use the Carrier Sheet.**
For details, refer to the help for the scanner driver.

4 **Scan the document with the image scanning application.**
For details, refer to the manual/help of the image scanning application.

ATTENTION

For the information about how to crop and output an image when using the Carrier Sheet, refer to the help for the scanner driver.

Scanning Photographs and Clippings without Damaging Them

Using the optional Carrier Sheet allows you to scan non-standard size documents such as photographs or clippings without damaging them.

1 **Place the document inside the Carrier Sheet.**
Open the Carrier Sheet and place the document against the top center of the Carrier Sheet.

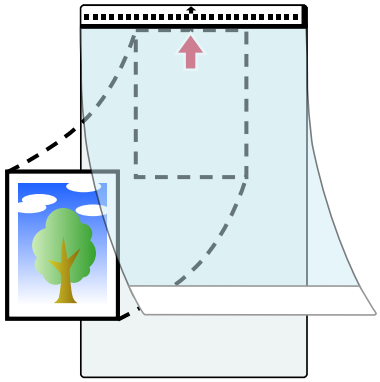

2 **Load the Carrier Sheet with the end with the black and white pattern as the leading edge and with the scanning side facing the ADF paper chute (feeder) (face-down).**
Secure the Carrier Sheet with the side guides to avoid skewing.

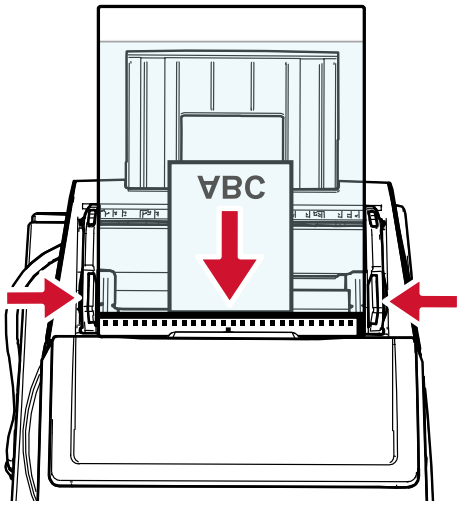

3 **Configure the scan settings in the scanner driver to use the Carrier Sheet.**
For details, refer to the help for the scanner driver.

4 **Scan the document with the image scanning application.**
For details, refer to the manual/help of the image scanning application.

ATTENTION

For the information about how to crop and output an image when using the Carrier Sheet, refer to the help for the scanner driver.

TIP

In the following cases, place a blank (white) sheet of paper behind the document when scanning.

- The scanned image is not output in the actual size of the document when [Automatic] is specified for [Paper size] in the scanner driver.
- Shadows appear around the edges of the scanned image.
- Black lines appear around the edges of a uniquely shaped cutting.
- Image outside the document appears on the scanned image.

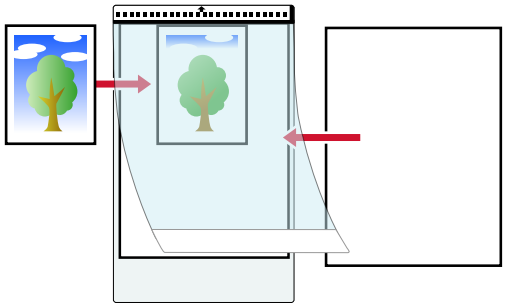

Scanning Long Page Documents

Documents with a length up to 5,588 mm (220 in.) can be scanned by long page scanning.
Depending on the resolution setting or the image scanning application, the document sizes that can be scanned may differ.
For details, refer to Paper Size (page 83), the help for your scanner driver, and the manual/help for your image scanning application.

1 **Load a document in the ADF paper chute (feeder).**

➡ How to Load Documents in the ADF Paper Chute (Feeder) (page 75)

2 **Support the loaded document with your hand so it does not fall out of the ADF paper chute (feeder).**
Be careful not to cut your finger on the edge of the document.

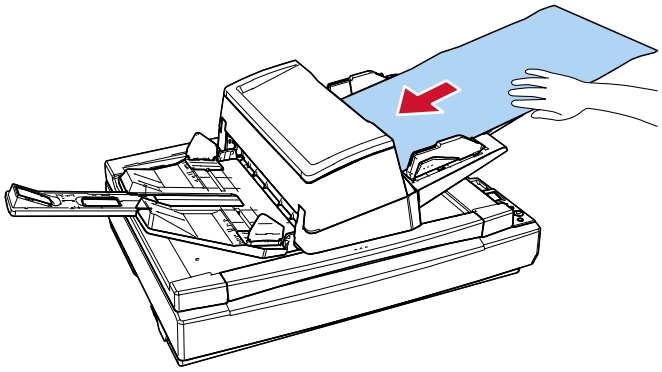

3 **In the scanner driver, configure the scan settings to scan the paper size of the long page.**
For details, refer to the help for the scanner driver.
For some image scanning applications, the setup window for the scanner driver may not appear.

4 **Scan the document with the image scanning application.**
For details, refer to the manual/help of the image scanning application.

5 **Secure enough space around the stacker and catch the ejected sheet so that it does not fall off the stacker.**
Be careful not to cut your finger on the edge of the document.

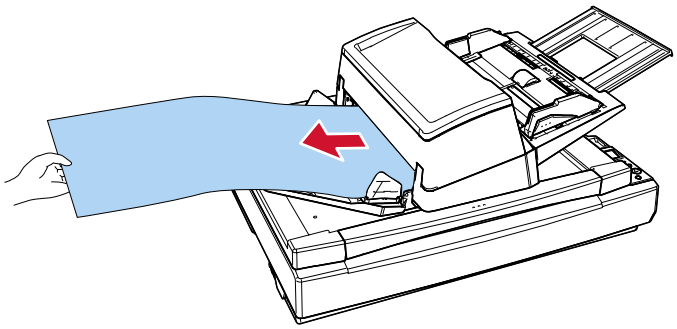

Feeding Documents Manually

When feeding documents manually, you can continue loading and scanning documents repeatedly after starting scanning.
To configure the scanner to wait for a document to be loaded onto the ADF paper chute (feeder) for a specified waiting time after scanning is started or document feeding is complete, specify the waiting time.
This enables continuous scanning as long as you load a document within the specified waiting time.
If the specified waiting time is exceeded, the scan is finished automatically.
By using this method, you can perform scanning as you check the documents one by one.
Manual feeding is effective in the following cases:

- To scan documents as you check the contents of each sheet
- To scan documents that are fed overlapped or jammed when the documents are loaded together in a batch
- To continue scanning documents such as magazines or newspaper clippings that cannot be loaded together, one at a time
- To scan a document folded in half, an envelope, or a multi-layered transfer paper one at a time

The following modes are available when feeding documents manually:

- Manual Continuous Mode
  Use this mode when scanning more than one document in succession manually.
- Manual Single Mode
  Use this mode when scanning a document folded in half, an envelope, or a multi-layered transfer paper one at a time manually.

If you use manual feeding frequently, the replacement cycle of the consumables may be shortened.

1 Check the paper weight range that can be scanned.

➡ Paper Weight (Thickness) (page 83)

When a document folded in half is scanned, the document may be fed skewed if the folded part is too thick.

2 Configure the settings for the scanner.

- When scanning more than one document in succession manually

  a Use one of the following methods to switch to Manual Continuous Mode, and set a timeout time.

  - [17:Manual/Continuous Feed Setting] and [18:Manual Feed Timeout] on the [Settings Menu] screen of the operator panel

    ➡ How to Use the Settings Menu (page 109)

  - Software Operation Panel

    ➡ Waiting Time in Manual Feeding [Manual Feeding] (page 318)

- When scanning a document folded in half, an envelope, or a multi-layered transfer paper one at a time manually

a Slide the feed mode switch to the left to enable Manual Single Mode.
The scanning speed slows down when the feed mode is switched to Manual Single Mode.

b Use one of the following methods to set a timeout time.

- [18:Manual Feed Timeout] on the [Settings Menu] screen of the operator panel

  ➡ How to Use the Settings Menu (page 109)

- Software Operation Panel

  ➡ Waiting Time in Manual Feeding [Manual Feeding] (page 318)

3 Load a document in the ADF paper chute (feeder).

To scan a multi-layered transfer paper, position the bound edge first when loading the paper.

➡ How to Load Documents in the ADF Paper Chute (Feeder) (page 75)

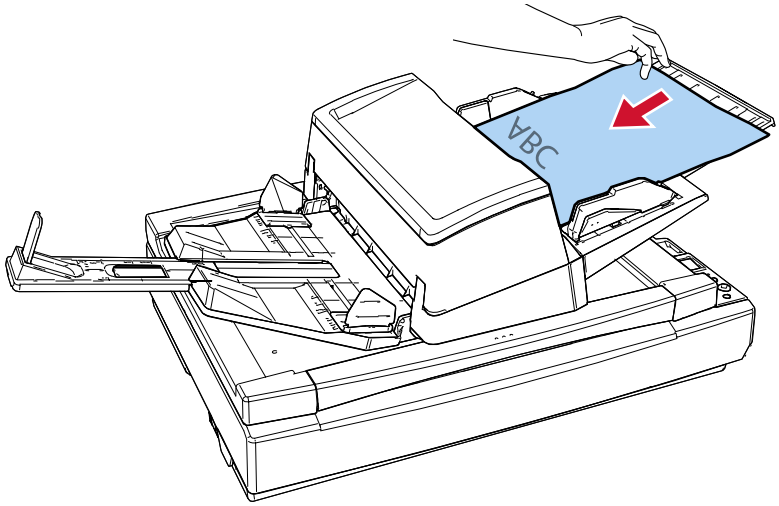

4 Scan the document with the image scanning application.

For details, refer to the manual/help of the image scanning application.

After scanning is started or a document is ejected, the scanner will wait for documents to be loaded in the ADF paper chute (feeder) until the timeout time elapses.
When more than one sheet is loaded, the document on the bottom of the stack is fed.
In Manual Continuous Mode, the rollers inside the ADF keep rotating.
In Manual Single Mode, the rollers inside the ADF do not rotate.

5 Load the next document in the ADF paper chute (feeder).

6 Repeat step 5 until all documents are scanned.

7 Finish scanning.

Scanning will finish if no document is loaded within the timeout time after the last document is ejected.
To immediately end a scan, press the [Scan/Enter] button or the [Stop/Clear] button.
Note that scanning cannot be canceled even if you press the [Stop/Clear] button while a document is being fed.

Sorting the Images Scanned in Simplex Scanning Mode in the Same Order in Which the Images Scanned in Duplex Scanning Mode Are Arranged [fi-8700S]

The scanner supports virtual duplex scanning, with which front-side pages of documents are scanned first, back-side pages are scanned in succession, and then scanned images are sorted automatically. In this case, you need an image scanning application that supports the virtual duplex scan function. You also need to configure the settings in the scanner driver.

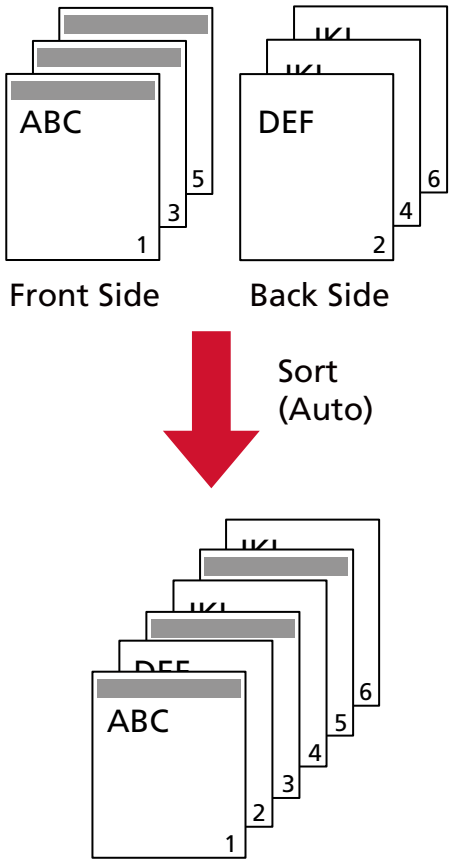

1 **Load documents on the ADF paper chute (feeder) with the front side (the side to be scanned) facing down.**

➡ How to Load Documents in the ADF Paper Chute (Feeder) (page 75)

2 **In the scanner driver, configure the scan settings for scanning both sides of documents virtually.**
For details, refer to the help for the scanner driver.

3 **Scan the documents with the image scanning application.**
For details, refer to the manual/help of the image scanning application.
When the scanning is complete, a message appears to prompt you to load the documents face-up.

4 Load documents on the ADF paper chute (feeder) with the back side (the side to be scanned) facing down.

➡ How to Load Documents in the ADF Paper Chute (Feeder) (page 75)

When you respond to the message shown, the back side pages of the documents are scanned.

ATTENTION

When scanning the back side pages, take note of the following:

- Load the documents so that they are scanned in the same order as front-side pages.
- Load the documents so that they are not scanned up-side down.

5 When the scanning is complete, the scanned pages are sorted automatically.

If the number of the documents are different between the front side and the back side, the documents are not sorted.

Scanning Books with the Flatbed [fi-8700/fi-8700S]

1 **Open the document cover.**

➡ How to Open the Document Cover (page 51)

2 **Place a document on the document bed.**

Place the document face-down to align its top left-hand corner with the reference point.

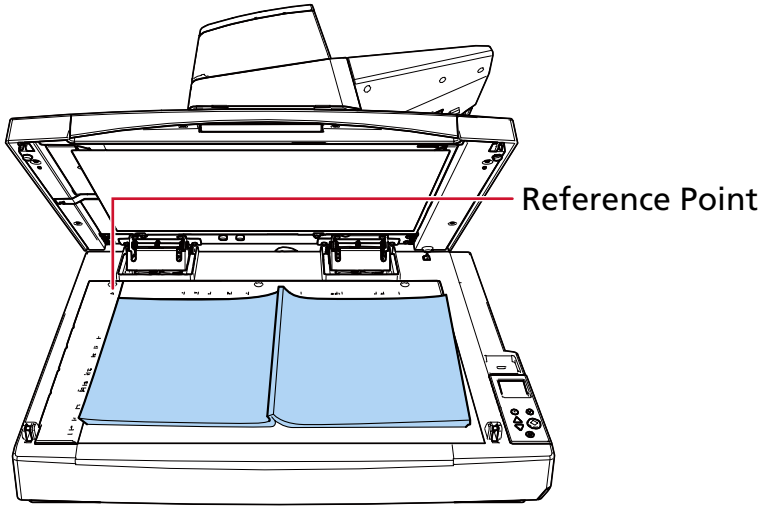

ATTENTION

Note that a curled or folded document may create a small gap between the document and the document bed, causing the scanned image to be blurred.

3 **Close the document cover slowly.**

➡ How to Close the Document Cover (page 52)

4 **In the scanner driver, configure the scan settings for the flatbed.**

For details, refer to the help for the scanner driver.

5 **Scan the document with the image scanning application.**

For details, refer to the manual/help of the image scanning application.

Scanning Documents on the Flatbed with the Document Cover Open [fi-8700/fi-8700S]

The scanner allows you to scan documents with the document cover open for the flatbed.
The scanner automatically corrects a scanned image that is skewed or recognizes the size of a document and outputs the image in that size.
In this case, you need to configure the settings in the scanner driver.

1 Open the document cover.

➡ How to Open the Document Cover (page 51)

2 Place a document on the document bed.

Place the document face-down to align its top left-hand corner with the reference point.

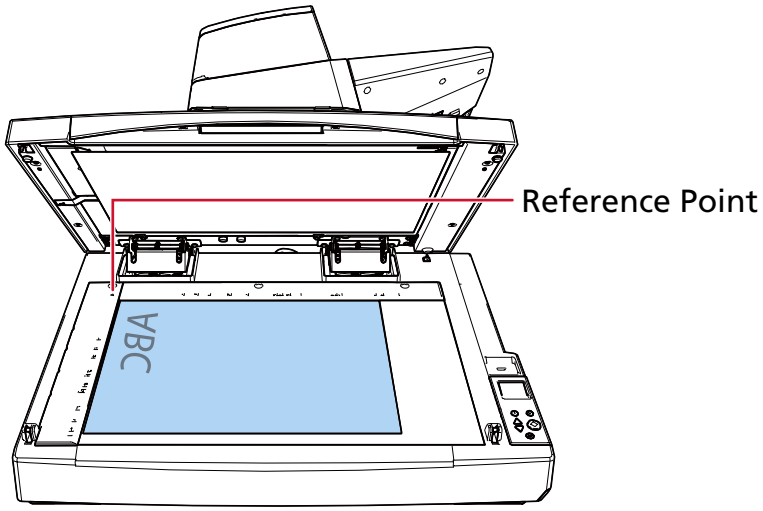

ATTENTION

Note that a curled or folded document may create a small gap between the document and the document bed, causing the scanned image to be blurred.

3 In the scanner driver, configure the scan settings for blocking ambient light when scanning with the flatbed.

For details, refer to the help for the scanner driver.

ATTENTION

Depending on the way ambient light is exposed on the document bed, the scanner may not be able to automatically correct a scanned image that is skewed or output the image in the recognized size.
For details, refer to the help for the scanner driver.

4 Scan the documents with the image scanning application.

For details, refer to the manual/help of the image scanning application.



Do not look at the light source directly during scanning.

Scanning Multiple Documents at Once on the Flatbed and Cropping Each Document as a Separate Image [fi-8700/fi-8700S]

Multiple documents can be placed on the flatbed and scanned, and each document can be cropped as a separate image.
In this case, you need to configure the settings in the scanner driver.

ATTENTION

To crop each document as a separate image, use the optional black document pad (sold separately).

➡ Scanner Options (page 348)

1 **Open the document cover.**

➡ How to Open the Document Cover (page 51)

2 **Place multiple documents on the document bed.**
Place the documents face-down.

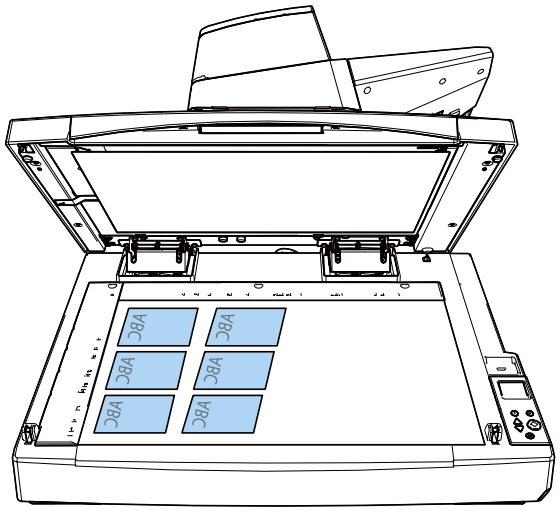

ATTENTION

- Note that a curled or folded document may create a small gap between the document and the document bed, causing the scanned image to be blurred.
- For details about the conditions for accurately detecting multiple documents, refer to the help for the scanner driver.

3 **Close the document cover slowly.**

➡ How to Close the Document Cover (page 52)

4 **In the scanner driver, configure the scan settings for scanning multiple documents at once on the flatbed and cropping each document as a separate image.**

For details, refer to the help for the scanner driver.

5 Scan the documents with the image scanning application.

For details, refer to the manual/help of the image scanning application.

ATTENTION

For details about the image cropping order, refer to the help for the scanner driver.

Scanning Documents Automatically at Regular Intervals with the Flatbed [fi-8700/fi-8700S]

Documents can be scanned automatically at regular intervals with the flatbed.
This feature eliminates the need to start scanning from the image scanning application each time you place a document on the flatbed.
In this case, you need to configure the settings in the scanner driver.

1. **Open the document cover.**
   ➡ How to Open the Document Cover (page 51)
2. **Place a document on the document bed.**
   ➡ Placing a Document on the Flatbed [fi-8700/fi-8700S] (page 82)
3. **Close the document cover slowly.**
   ➡ How to Close the Document Cover (page 52)
4. **In the scanner driver, configure the scan settings for scanning documents automatically at regular intervals with the flatbed.**
   For details, refer to the help for the scanner driver.
5. **Scan the document with the image scanning application.**
   For details, refer to the manual/help of the image scanning application.
   When scanning is complete, a window showing the timer (seconds) appears on your computer, and the countdown begins.
6. **Before the timer (seconds) reaches 0, place the next document on the document bed.**
7. **Close the document cover slowly.**
   When the timer reaches 0, the next scan starts.
   When the next scan is complete, a window showing the timer (seconds) appears on your computer, and the countdown begins.
8. **Repeat steps 6 to 7 until all documents are scanned.**
9. **Finish scanning.**
   Click the [Finish] button on the window showing the timer (seconds).

> **ATTENTION**
> If automatic selection of the ADF or flatbed is enabled in the scanner driver, the ADF operates in the same way as well.

Configuring Not to Detect Certain Overlap Patterns

If detecting overlapped documents during a scan is set, when you scan a document with a paper attachment such as a sticky note, receipt, or photo, it is detected as overlapped documents, and the scan may stop. Use the intelligent multifeed detection function not to detect these types of documents.
This function has two modes, a mode that is used to configure the settings manually by a user every time the scanner detects overlapped documents, and a mode that is used to configure the settings automatically by the scanner based on the overlap patterns (length and location) for paper attachments such as sticky notes, receipts, or photos that the scanner has memorized.
To use this setting, detecting overlapped documents needs to be set in advance.

- [Multifeed Detection] in the scanner driver
  For details, refer to the help for the scanner driver.
- [Multifeed] in Software Operation Panel

➡ Specifying a Method to Detect Overlapped Documents [Multifeed] (page 305)

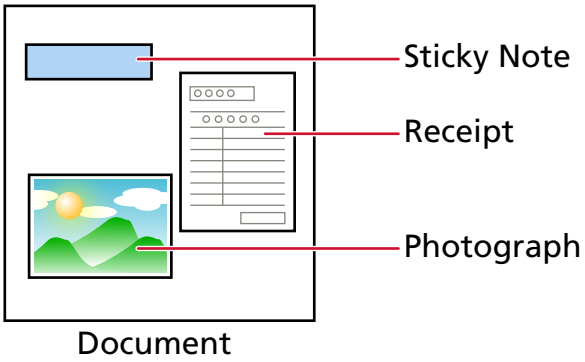

The following three operation modes are available.

Operation Mode	Description
Manual mode	Specify whether or not to detect overlapped documents every time they are detected. Scanning will stop immediately if overlapped documents are detected. Note that if the setting for stopping the scan to check images is set to on in the scanner driver, scanning will stop after overlapped documents are ejected.
Auto mode 1	Specify the setting not to automatically detect overlapped documents when the paper attachment is the same length and in the same location as memorized. Scanning will stop after the overlapped documents are ejected. Overlap patterns can be memorized for up to eight sheets (up to four overlap patterns can be memorized per sheet).

Operation Mode	Description
	Once overlap patterns have been memorized for eight sheets, the memorized patterns will be overwritten by any newly detected patterns starting from the first sheet that was memorized. However, when the scanner is turned off and on, the number of memorized overlap patterns depends on the setting for [Overlap patterns at power-off] in Software Operation Panel. ➡ Setting to Ignore Certain Overlap Patterns [Intelligent Multifeed Function] (page 314) **TIP** If you want the scanner to memorize five or more overlap patterns for a document, scan the document once for the scanner to memorize up to four overlap patterns, then scan the document again for the scanner to memorize the fifth and subsequent overlap patterns so that the newly memorized overlap patterns will not be detected as overlapping from the next scan. Because the same document is scanned twice, the scanner effectively memorizes it as two documents.
Auto mode 2	Specify the setting not to automatically detect overlapped documents when the paper attachment is the same length or shorter as memorized. Scanning will stop after the overlapped documents are ejected. Only one overlap pattern can be memorized in this operation mode.

Use one of the following methods to select an operation mode.

- [14:iMFF Setting] on the [Settings Menu] screen of the operator panel

  ➡ How to Use the Settings Menu (page 109)

- Software Operation Panel

  ➡ Setting to Ignore Certain Overlap Patterns [Intelligent Multifeed Function] (page 314)

Operational Procedure

1 When overlapped documents are detected, the following is displayed on the LCD:

When Overlapped Documents Are Detected
Multifeed detected (Overlap)

When Overlapped Documents Are Detected
Press the [Scan/Enter] button. If there is a document that is being fed, it will be ejected.
Multifeed detected (Length) Press the [Scan/Enter] button. If there is a document that is being fed, it will be ejected.

2 Follow each instruction below depending on the operation mode that is selected.

- Manual mode

  Scanning will stop immediately when overlapped documents are detected. Either press the [Scan/Enter] button to eject the document from the paper path, or open the ADF to remove the document. Then, load the overlapped documents back in the ADF paper chute (feeder).

  ➔ How to Open the ADF (page 49)

  > CAUTION
  > When the ADF is open, it might close accidentally. Be careful not to get your fingers caught.

  After removing the documents while the ADF is open, close the ADF.

  ➔ How to Close the ADF (page 50)

  > CAUTION
  > Be careful not to get your fingers caught when closing the ADF.

  > **ATTENTION**
  > Confirm that the ADF is closed properly. Otherwise, documents may not be fed into the ADF.

  Note that if the setting for stopping the scan to check images is set to on in the scanner driver, scanning will stop after overlapped documents are ejected, so press the [Scan/Enter] button and load the overlapped documents back in the ADF paper chute (feeder).

- Auto mode 1/Auto mode 2

  Scanning will stop after overlapped documents are ejected, so press the [Scan/Enter] button and load the overlapped documents back in the ADF paper chute (feeder).

3 When documents are ejected, the indication on the LCD changes to the following depending on the selected operation mode.

- Manual mode

When Overlapped Documents Are Detected	When Documents Are Ejected
Multifeed detected (Overlap) Press the [Scan/Enter] button. If there is a document that is being fed, it will be ejected.	Detecting a multifeed for the next document is enabled. ——————— Pressing the [Menu] button enables/disables the function. Pressing the

When Overlapped Documents Are Detected	When Documents Are Ejected
	[Scan/Enter] button resumes scanning.
Multifeed detected (Length) Press the [Scan/Enter] button. If there is a document that is being fed, it will be ejected.	[Ready] screen

- Auto mode 1/Auto mode 2

When Overlapped Documents Are Detected	When Documents Are Ejected
Multifeed detected (Overlap) Press the [Scan/Enter] button. If there is a document that is being fed, it will be ejected.	The function to memorize a overlap pattern is disabled. ———————— Pressing the [Menu] button enables/disables the function. Pressing the [Scan/Enter] button resumes scanning.
Multifeed detected (Length) Press the [Scan/Enter] button. If there is a document that is being fed, it will be ejected.	[Ready] screen

4 Operate the scanner as follows, and restart scanning.

The indication on the LCD switches between [Detecting a multifeed for the next document is enabled.] and [Detecting a multifeed for the next document is disabled.] or between [The function to memorize a overlap pattern is enabled.] and [The function to memorize a overlap pattern is disabled.] every time the [Menu] button is pressed.

Make sure that [Detecting a multifeed for the next document is disabled.] or [The function to memorize a overlap pattern is enabled.] is displayed on the LCD, and then press the [Scan/Enter] button or start scanning from the computer.

If documents are scanned while [Detecting a multifeed for the next document is disabled.] or [The function to memorize a overlap pattern is enabled.] is displayed, the scanner operates in each mode as follows.

- Manual mode (Bypass by front panel button)
  The scanner scans the next sheet without detecting overlapped documents, and from the second sheet onwards, detects overlapped documents based on the setting configured in the scanner driver or on Software Operation Panel.
- Auto mode 1 (Bypass by combination of length and position)
  The scanner memorizes the length and location of the paper attachment that was detected as overlapped documents, and continues scanning.
  If a memorized overlap pattern is recognized in a subsequent scanning, documents with the pattern will not be detected as overlapped documents automatically (*1) (*2).
- Auto mode 2 (Bypass by length)

The scanner memorizes the length of the longest paper attachment that was detected as overlapped documents, and continues scanning.
If an overlap pattern of the memorized length or shorter is recognized in a subsequent scanning, documents with the pattern will not automatically be detected as overlapped documents (*2) (*3).

***1:**Overlap patterns can be memorized for up to eight sheets (up to four overlap patterns can be memorized per sheet).
Once overlap patterns have been memorized for eight sheets, the memorized patterns will be overwritten by any newly detected patterns starting from the first sheet that was memorized. However, when the scanner is turned off and on, the number of memorized overlap patterns depends on the setting for [Overlap patterns at power-off] in Software Operation Panel.

➡ Setting to Ignore Certain Overlap Patterns [Intelligent Multifeed Function] (page 314)

TIP

If you want the scanner to memorize five or more overlap patterns for a document, scan the document once for the scanner to memorize up to four overlap patterns, then scan the document again for the scanner to memorize the fifth and subsequent overlap patterns so that the newly memorized overlap patterns will not be detected as overlapping from the next scan.
Because the same document is scanned twice, the scanner effectively memorizes it as two documents.

***2:**You can erase memorized overlap patterns using one of the following methods.

- [14:iMFF Setting] on the [Settings Menu] screen of the operator panel

➡ How to Use the Settings Menu (page 109)

- Software Operation Panel

➡ Setting to Ignore Certain Overlap Patterns [Intelligent Multifeed Function] (page 314)

When the patterns are erased, the LCD displays A1-00 or A2-00.
You can erase overlap patterns that were not supposed to be memorized.
Be careful with this operation because all memorized overlap patterns will be erased.

***3:**Only one overlap pattern can be memorized in this operation mode.

Disabling the Paper Protection Function

When the paper protection function is enabled, in the following cases, the scan may stop even when the documents are being fed correctly.

- If you scan a wrinkled document
- If you scan a document that is not square or rectangular
- If you scan a document that has a dark background
- If you scan a document that has text or patterned background printed close to the edge
- If a document is fed skewed

In this case, you can disable paper protection only for the protected document to be scanned again.

Operational Procedure

1 When paper protection is set off while a document is being scanned, the following is displayed on the LCD.

When Paper Protection Is Set Off
Paper protection (feeding noise) Remove the document. Be careful not to get the document jammed or skewed when reloading it. For details, refer to the Operator's Guide.
Paper protection (feeding accuracy) Remove the document. Be careful not to get the document jammed or skewed when reloading it. For details, refer to the Operator's Guide.

2 Open the ADF and remove the document.

➡ How to Open the ADF (page 49)

CAUTION When the ADF is open, it might close accidentally. Be careful not to get your fingers caught.

3 Close the ADF.

➡ How to Close the ADF (page 50)

When you close the ADF, the indication on the LCD changes as follows.

When Paper Protection Is Set Off	When Documents Are Ejected
Paper protection (feeding noise) Remove the document. Be careful not to get the document jammed or skewed when reloading it. For details, refer to the Operator's Guide.	The paper protection function is enabled. ———————— Pressing the [Menu] button enables/disables the function. Pressing the
Paper protection (feeding accuracy)	

When Paper Protection Is Set Off	When Documents Are Ejected
Remove the document. Be careful not to get the document jammed or skewed when reloading it. For details, refer to the Operator's Guide.	[Scan/Enter] button resumes scanning.



Be careful not to get your fingers caught when closing the ADF.

ATTENTION

Confirm that the ADF is closed properly. Otherwise, documents may not be fed into the ADF.

4 Load the removed document back in the ADF paper chute (feeder).

5 Operate the scanner as follows, and restart scanning.

Note that the indication on the LCD switches between [The paper protection function is enabled.] ↔ [The paper protection function is disabled.] every time the [Menu] button is pressed. Confirm that [The paper protection function is disabled.] is displayed on the LCD, and then press the [Scan/Enter] button or start scanning from the computer.

When [The paper protection function is disabled.] is displayed, the next document is scanned with paper protection disabled. After that, the subsequent documents are scanned according to the paper protection setting of either scanner driver, Software Operation Panel, or operator panel.

TIP

If errors to protect documents are frequently displayed on the LCD, refer to Paper Damage Prevention Errors Occur Frequently (page 238).

Daily Care

This section describes how to clean the scanner.

CAUTION

- Do not use aerosol spray or spray that contains alcohol. Paper dust blown up by strong air from the spray may enter inside the scanner which may cause the scanner to fail or malfunction.
  Also note that sparks generated by static electricity may cause a fire.
- The inside of the ADF becomes very hot when the scanner is being used. Before you start cleaning the inside of the ADF, make sure to turn off the power, unplug the power cable and wait for at least 15 minutes for the inside of the ADF to cool down.

Cleaning Materials

Name	Part No.	Notes
Cleaner F1 	PA03950-0352	100 ml Liquid cleaner to use for removing dirt and stains
Cleaning Paper 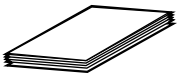	CA99501-0012	10 sheets Used to clean the inside of the scanner with ease. Spray it with Cleaner F1 and scan it with the scanner in the same way as a document.
Cleaning Wipe 	PA03950-0419	24 packets Pre-moistened with Cleaner F1. It can be used instead of moistening a cloth with Cleaner F1.
Cotton swab	Commercially available	Used to clean a tiny part such as the ultrasonic sensor.
Dry cloth		Used to wipe off dirt and stains. Moisten it with Cleaner F1 for cleaning.

ATTENTION

In order to use the cleaning materials safely and correctly, read the precautions on each product thoroughly.

For more information about the cleaning materials, contact the distributor/dealer where you purchased this product.

Location and Frequency

Location		Frequency
Inside of the scanner (ADF)	Brake roller	Every 10,000 sheets
	Pick roller	
	Feed roller	
	Eject roller	
	Plastic roller	
	Rubber roller	
	Chute roller	
	Document sensor	
	Ultrasonic sensor	
	Glass	
	Paper path	
Inside of the scanner (Flatbed) [fi-8700/fi-8700S]	Document pad	
	Document bed	

The inside of the scanner (ADF) needs to be cleaned regularly for every certain number of sheets scanned. The scanner records the number of sheets scanned so that you can check the number of sheets scanned after you cleaned it last.
Use one of the following methods to check the number of sheets that have been scanned.

- [5:Consumable counters] on the [Settings Menu] screen of the operator panel

  ➡ How to Use the Settings Menu (page 109)

- Software Operation Panel

  ➡ Checking the Sheet Counters (page 276)

ATTENTION

Cleaning cycles may vary depending on the condition of the documents. Also, cleaning must be performed more frequently when the following types of documents are scanned:

- Smooth-faced documents such as coated paper
- Documents with printed text/graphics that almost cover the entire surface
- Chemically-treated documents such as carbonless paper
- Documents containing a large amount of calcium carbonate
- Documents written in lead pencil
- Documents on which the toner is not sufficiently fused

Cleaning the Outside of the Scanner

The scanner including the ADF paper chute (feeder) and the stacker should be cleaned with either a piece of dry cloth, a cloth moistened with Cleaner F1/mild detergent, or a sheet of Cleaning Wipe.

ATTENTION

- To avoid deformation and discoloration, never use paint thinner or any other organic solvents.
- Be careful not to let any moisture or water inside the scanner during cleaning.
- It may take a long time to dry if an excessive amount of Cleaner F1/mild detergent is used. Use only a small amount. Wipe off the cleaner completely to leave no residue on the cleaned parts.

- **fi-8600**

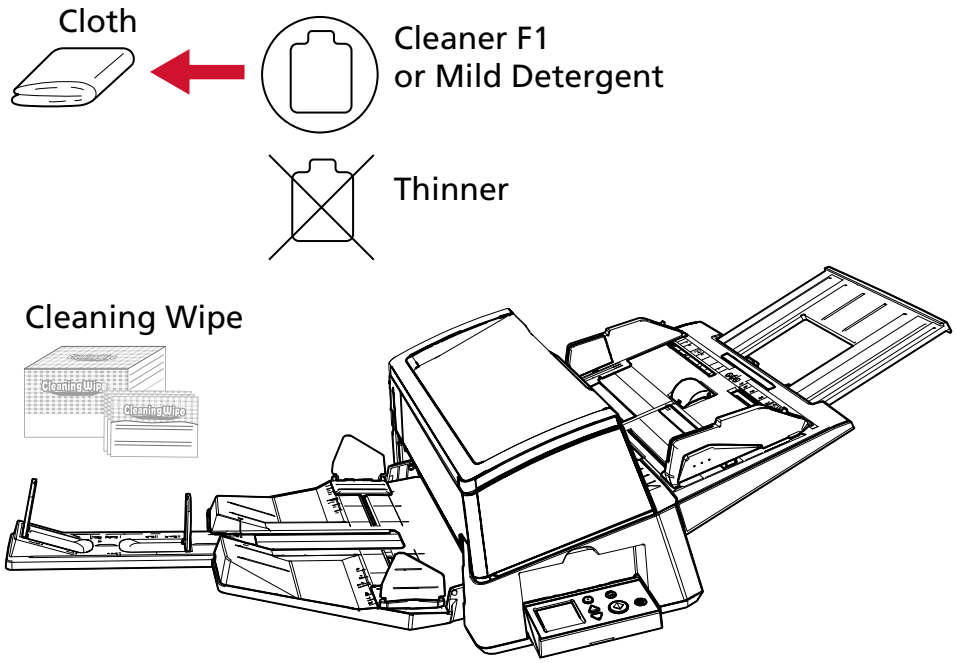

- **fi-8700/fi-8700S**

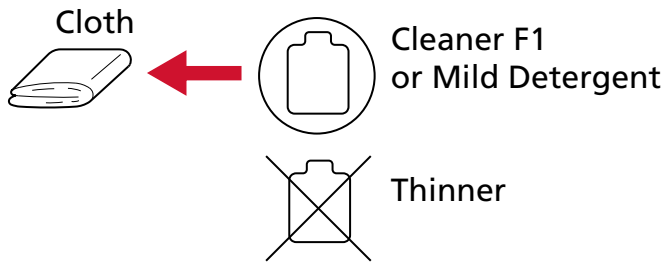

Cleaning Wipe

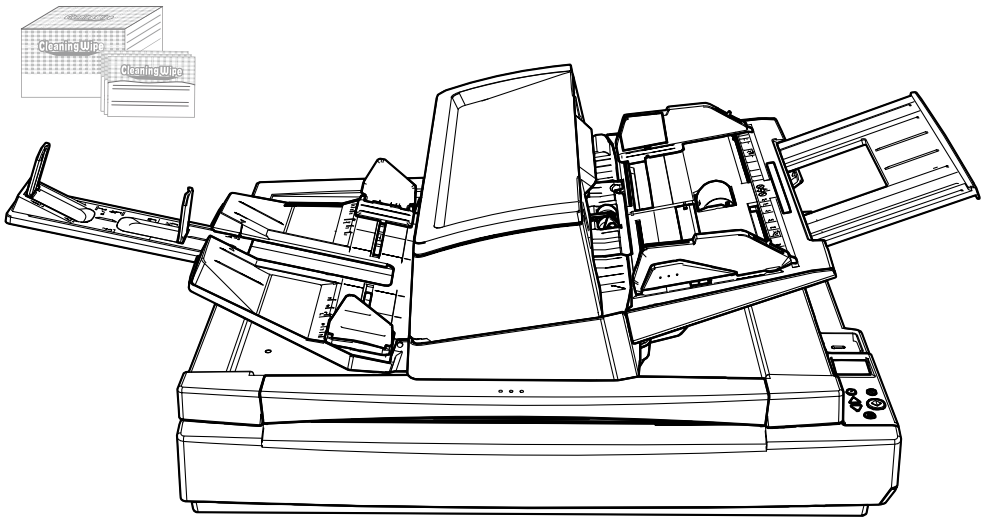

Cleaning the Inside of the Scanner (ADF) with Cleaning Paper

The inside of the ADF can be cleaned with a sheet of Cleaning Paper moistened with Cleaner F1.
As the scanner continues to feed the documents, paper dust will accumulate inside the ADF and it may cause problems related to scanning or affect the scanned results. Cleaning should be performed approximately every 10,000 sheets scanned. Note that this guideline varies depending on the types of documents you scan. For instance, it may be necessary to clean the scanner more frequently when you scan documents on which the toner is not sufficiently fused.

ATTENTION

- Do not use water or mild detergent to clean the ADF.
- It may take a long time to dry if an excessive amount of Cleaner F1 is used. Use only a small amount.

1 Turn on the scanner.

➡ How to Turn the Power ON (page 44)

The [Ready] screen is displayed on the LCD.

2 Press the [Menu] button.

The [Settings Menu] screen is displayed on the LCD.

3 Press the [△]/ [▽] button to select [3:Cleaning], then press the [Scan/Enter] button.

The [Cleaning] screen is displayed on the LCD.

4 Press the [△]/[▽] button to select [1:Cleaning Paper], then press the [Scan/Enter] button.

A message is displayed on the LCD.

ATTENTION

Do not start scanning with an image scanning application during cleaning.

5 Spray the Cleaning Paper with Cleaner F1.

6 Pull out the chute extension according to the length of the Cleaning Paper.

➡ Setting Up the ADF Paper Chute (Feeder) (page 57)

7 Adjust the stacker according to the length of the Cleaning Paper.

➡ Setting Up the Stacker (page 58)

8 **Load the Cleaning Paper in the ADF paper chute (feeder).**

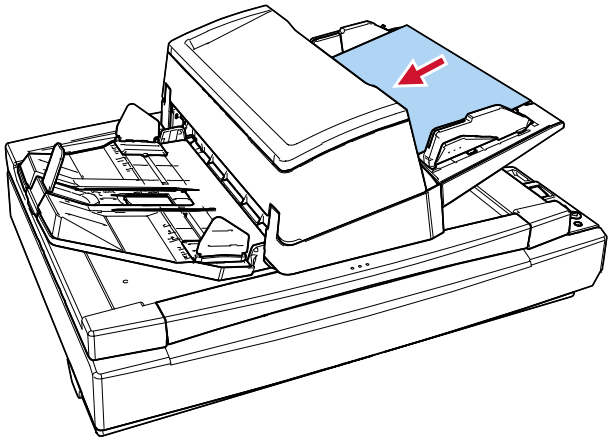

9 **Adjust the side guides to the width of the Cleaning Paper.**
Move the side guides while pressing the side guide buttons so that there is no space between the side guides and the Cleaning Paper.
Otherwise, the Cleaning Paper may be fed skewed.

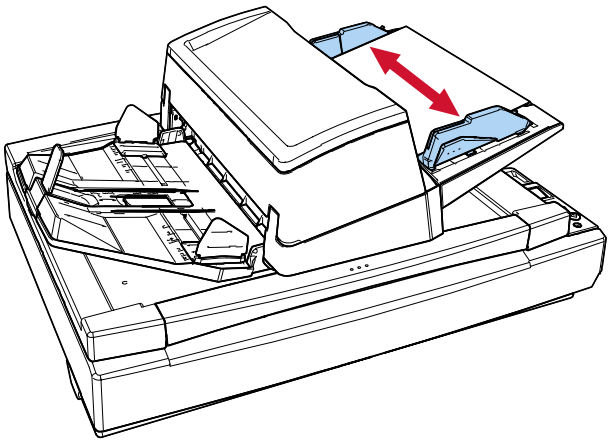

10 **Press the [Scan/Enter] button, and scan the Cleaning Paper.**
The Cleaning Paper is fed and ejected onto the stacker.

11 **Use one of the following methods to clear the cleaning counter.**

- [5:Consumable counters] on the [Settings Menu] screen of the operator panel

  ➡ How to Use the Settings Menu (page 109)

- Software Operation Panel

  ➡ Clearing the Sheet Counters (page 279)

Cleaning the Inside of the Scanner (ADF) with a Cloth

The inside of the ADF can be cleaned with a piece of cloth moistened with Cleaner F1, or a sheet of Cleaning Wipe.
As the scanner continues to feed the documents, paper dust will accumulate inside the ADF and it may cause problems related to scanning or affect the scanned results. Cleaning should be performed approximately every 10,000 sheets scanned. Note that this guideline varies depending on the types of documents you scan. For instance, it may be necessary to clean the scanner more frequently when you scan documents on which the toner is not sufficiently fused.

> **CAUTION**
> The inside of the ADF becomes very hot when the scanner is being used. Before you start cleaning the inside of the ADF, make sure to turn off the power, unplug the power cable and wait for at least 15 minutes for the inside of the ADF to cool down.

ATTENTION

- Do not use water or mild detergent to clean the ADF.
- It may take a long time to dry if an excessive amount of Cleaner F1 is used. Use only a small amount. Wipe off the cleaner completely to leave no residue on the cleaned parts.

1 **Turn off the scanner, unplug the power cable, then wait for at least 15 minutes until the temperature inside the ADF lowers.**

➡ How to Turn the Power OFF (page 46)

2 **Open the ADF.**

➡ How to Open the ADF (page 49)

> **CAUTION**
> When the ADF is open, it might close accidentally. Be careful not to get your fingers caught.

3 Clean the following locations with a cloth moistened with Cleaner F1, or a sheet of Cleaning Wipe.

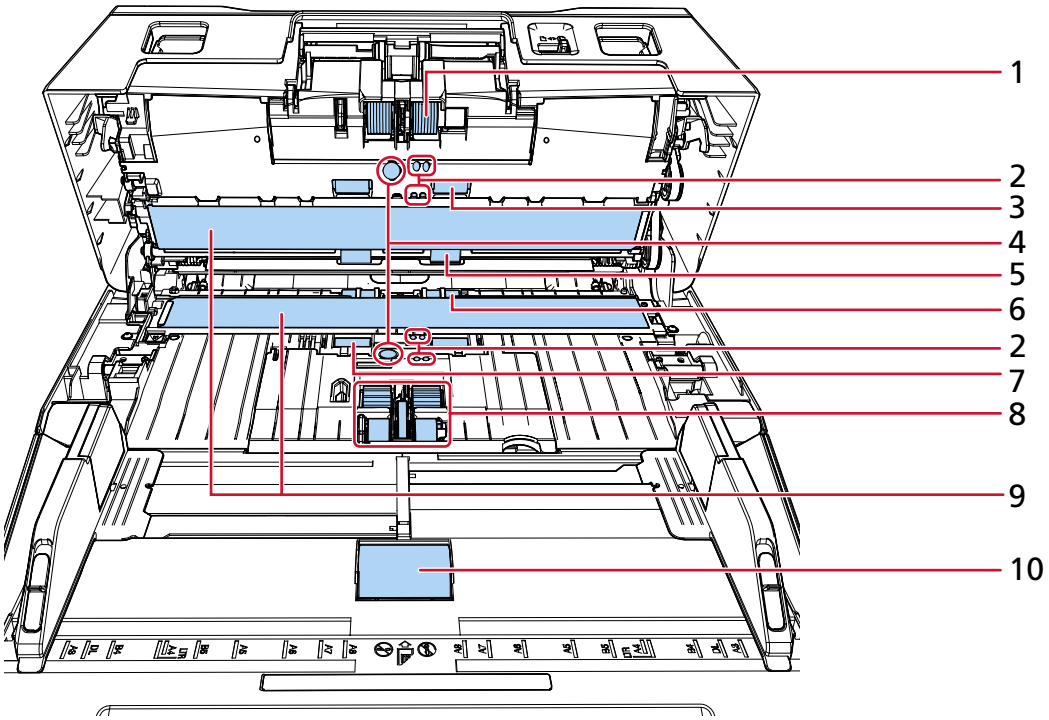

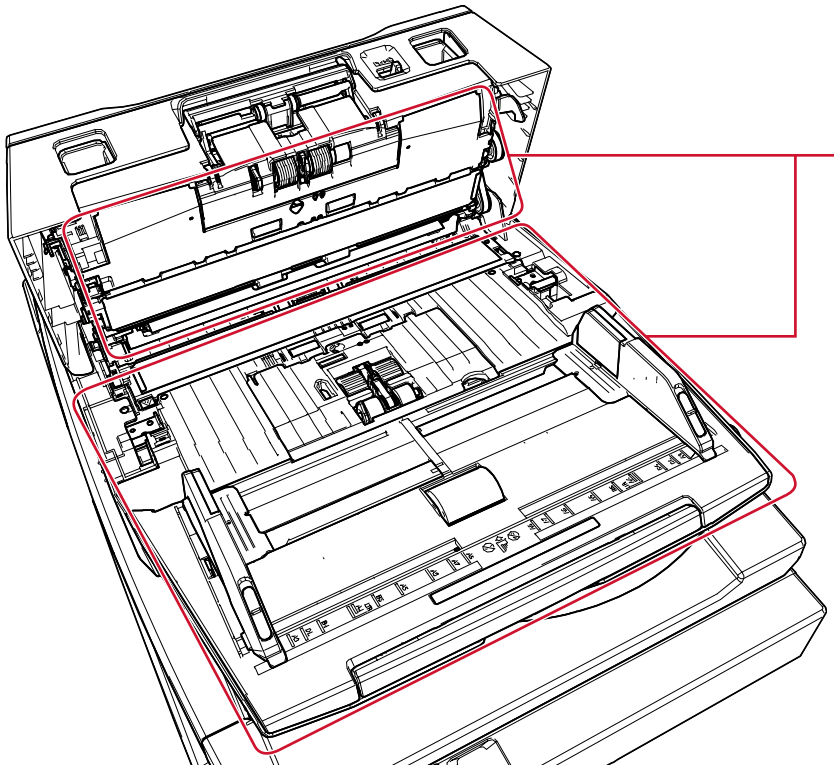

No.	Location
1	Brake roller (× 2)
2	Document sensor (× 8)
3	Feed roller (× 2)
4	Ultrasonic sensor (× 2)
5	Eject roller (× 2)
6	Plastic roller (× 2)
7	Rubber roller (× 2)
8	Pick roller (× 5)
9	Glass (× 2)
10	Chute roller (× 1)
11	Paper path (× 2)

1 Brake roller (× 2)

Remove the brake roller from the scanner.
For details about removing the brake roller, refer to Replacing the Brake Roller (page 187).
Gently wipe off any dirt or dust along the grooves, taking care not to damage the roller surface.

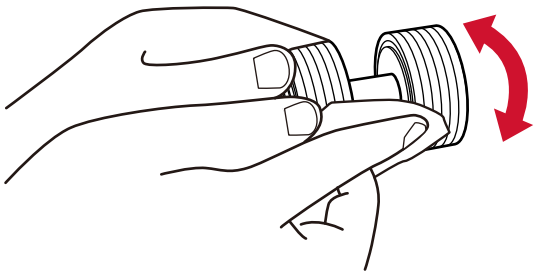

2 Document sensor (× 2)

4 Ultrasonic sensor (× 2)

Gently wipe dirt and dust off the surface of the document and ultrasonic sensors.

TIP

If it is difficult to clean, use a cotton swab.

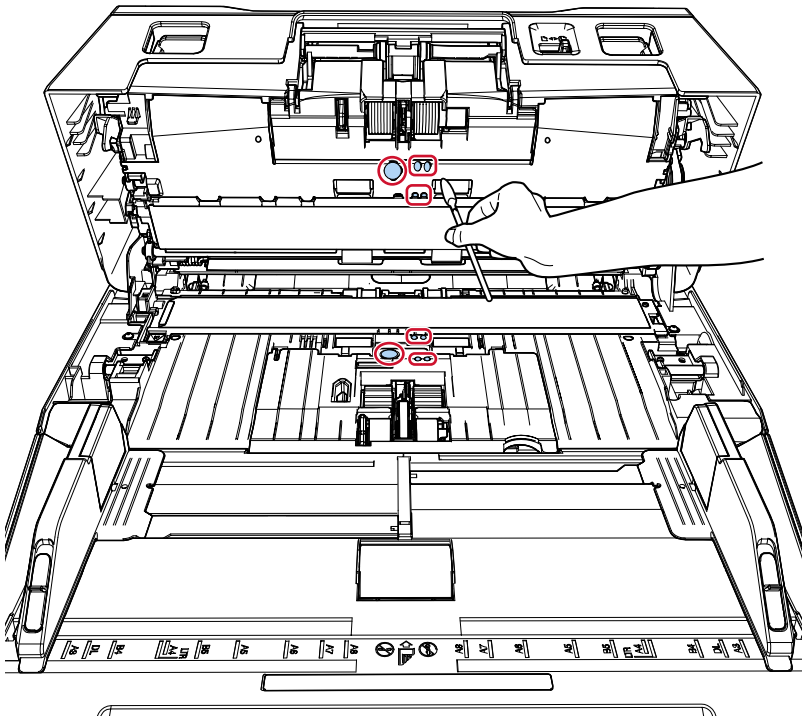

3 Feed roller (× 2)

5 Eject roller (× 2)

The power must be turned on to rotate the feed/eject rollers for cleaning.

a Plug in the power cable and turn on the scanner.

➡ How to Turn the Power ON (page 44)

The [Ready] screen is displayed on the LCD.

b Press the [Menu] button.
The [Settings Menu] screen is displayed on the LCD.

c Press the [△]/ [▽] button to select [3:Cleaning], then press the [Scan/Enter] button.
The [Cleaning] screen is displayed on the LCD.

d Press the [△]/ [▽] button to select [2:Roller Wipe], then press the [Scan/Enter] button.
A message is displayed on the LCD.

ATTENTION

Do not start scanning with an image scanning application during cleaning.

e Open the ADF.

➔ How to Open the ADF (page 49)

> **CAUTION** When the ADF is open, it might close accidentally. Be careful not to get your fingers caught.

f If you press the [Scan/Enter] button, the feed/eject rollers rotate a certain amount simultaneously.
As a guideline, pressing the [Scan/Enter] button seven times will rotate the feed/eject rollers one revolution.

- fi-8600

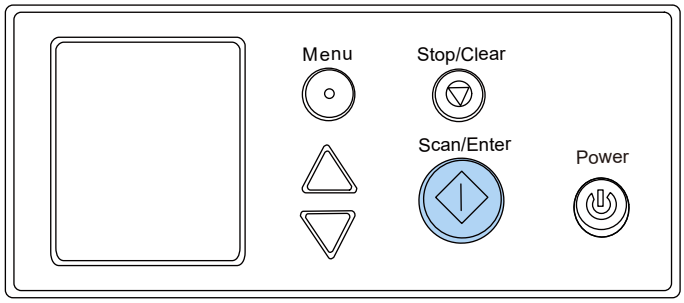

- fi-8700/fi-8700S

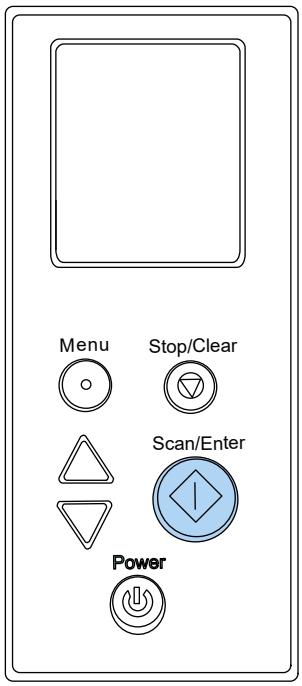

> **CAUTION** Be careful not to touch the rollers with your hand while they are rotating.

g Put a piece of cloth moistened with Cleaner F1 or a sheet of Cleaning Wipe against the surface of the rotating feed/eject roller, and wipe horizontally to clean dirt and dust off the whole surface.
Make sure that it is wiped properly because black residue on the rollers will affect the feeding performance.

6 Plastic roller (× 2)

Gently wipe dirt and dust off the roller, taking care not to damage the roller surface. Make sure that it is wiped properly because black residue on the rollers will affect the feeding performance.
Be careful not to damage the sponge that is attached to the roller.

7 Rubber roller (× 2)

Gently wipe dirt and dust off the roller, taking care not to damage the roller surface. Make sure that it is wiped properly because black residue on the rollers will affect the feeding performance.

8 Pick roller (× 5)

Gently wipe off any dirt or dust along the grooves as you rotate the roller manually, taking care not to damage the roller surface. Make sure that it is wiped properly because black residue on the rollers will affect the feeding performance.

9 Glass (× 2)

Gently wipe dirt and dust off the glass sections.

ATTENTION
Vertical streaks may appear on images if the glass section is dirty.

10 Chute roller (× 1)

With the chute roller cover open, gently wipe off any dirt or dust on the surface of the roller. Make sure that it is wiped properly because black residue on the rollers will affect the feeding performance.

11 Paper path (× 2)

Gently wipe the dirt and dust off the surface of the paper path.

4 Close the ADF.

➡ How to Close the ADF (page 50)

CAUTION Be careful not to get your fingers caught when closing the ADF.

ATTENTION

Confirm that the ADF is closed properly. Otherwise, documents may not be fed into the ADF.

5 Use one of the following methods to clear the cleaning counter.

- [5:Consumable counters] on the [Settings Menu] screen of the operator panel

  ➡ How to Use the Settings Menu (page 109)

- Software Operation Panel

  ➡ Clearing the Sheet Counters (page 279)

Cleaning the Inside of the Scanner (Flatbed) [fi-8700/fi-8700S]

The flatbed can be cleaned with a piece of cloth moistened with Cleaner F1, or a sheet of Cleaning Wipe.

1 Open the document cover.

➡ How to Open the Document Cover (page 51)

2 Clean the following locations with a cloth moistened with Cleaner F1, or a sheet of Cleaning Wipe.

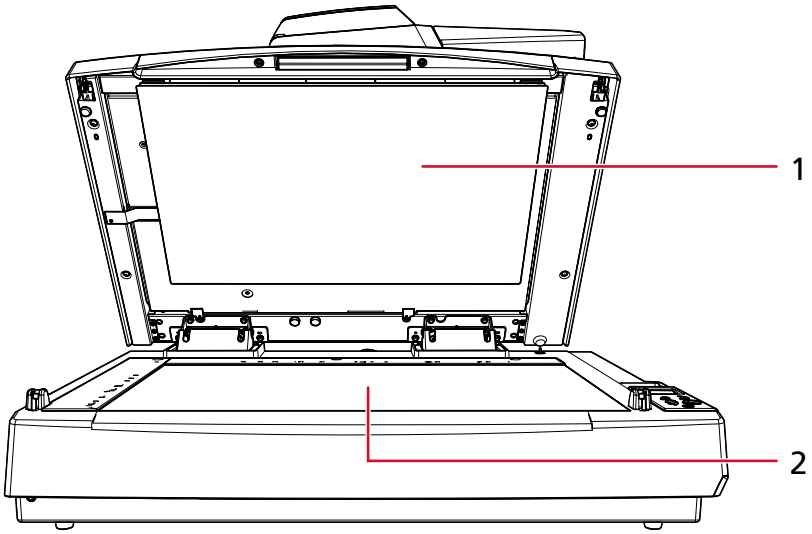

No.	Location
1	Document pad
2	Document bed

ATTENTION

Be careful not to let the cleaner in between the document bed and the plastic frame.

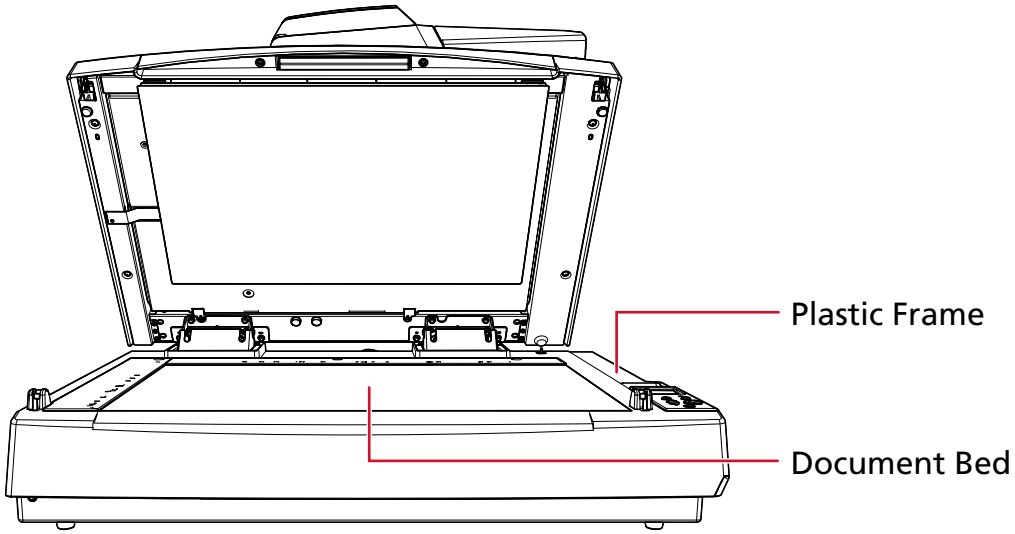

3 **Wait for the cleaned parts to dry.**

4 **Close the document cover slowly.**

➡ How to Close the Document Cover (page 52)

Cleaning the Carrier Sheet

The Carrier Sheet should be cleaned with either a piece of dry cloth, a cloth moistened with Cleaner F1/mild detergent, or a sheet of Cleaning Wipe.
Gently wipe dirt and dust off the surface and the inside of the Carrier Sheet.
As you keep using the Carrier Sheet, dirt and dust will accumulate on the surface and the inside. Clean it regularly because it may cause problems related to scanning or affect the scanned results.

ATTENTION

- Make sure that the Carrier Sheet is not creased.
- To avoid deformation and discoloration, never use paint thinner or any other organic solvents.
- Do not use force to rub against the Carrier Sheet because doing so may cause damage or deformation.
- After cleaning the inside of the Carrier Sheet with a cloth moistened with Cleaner F1/mild detergent or a sheet of Cleaning Wipe, do not close the Carrier Sheet until it is completely dry.
- The Carrier Sheet should be replaced approximately every 500 scans.
  Note that these guidelines vary depending on the type of documents scanned and how often the scanner is used and cleaned.
  For information on purchasing the Carrier Sheets, contact the distributor/dealer where you purchased this product.

Replacing the Consumables

This section explains how to replace the consumables for the scanner.

> **CAUTION** The inside of the ADF becomes very hot when the scanner is being used. Before you replace the consumables, make sure to turn off the power, unplug the power cable and wait for at least 15 minutes for the inside of the ADF to cool down.

Consumables and Replacement Cycles

Name	Part No.	Suggested Replacement Cycle
BRAKE ROLLER 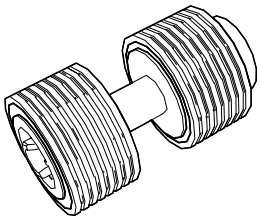	PA03740-K010	Every 250,000 sheets
PICK ROLLER 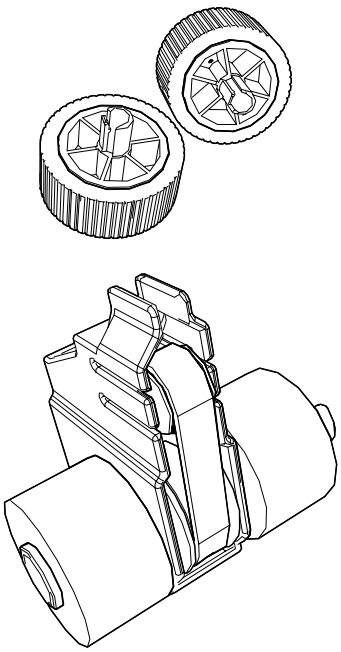	PA03740-K011	Every 250,000 sheets

Consumables need to be replaced periodically. It is recommended that you keep a stock of new consumables and replace them before it reaches the end of the consumable life. The scanner records the number of sheets scanned for each consumable (pick roller and brake roller) and the

amount of remaining ink (print cartridge), which allows you to determine when to replace consumables.
Use one of the following methods to check the number of sheets that have been scanned and the amount of remaining ink.

- [5:Consumable counters] on the [Settings Menu] screen of the operator panel

  ➡ How to Use the Settings Menu (page 109)

- Software Operation Panel

  ➡ Checking the Sheet Counters (page 276)

Note that the suggested replacement cycles are guidelines for using A4 (80 g/m^2 [20 lb]) wood-free or wood-containing paper, as these cycles vary depending on the type of documents scanned, how often the scanner is used and cleaned, and your operating environment.

ATTENTION

Only use the specified consumables.

For information on purchasing the consumables, contact the distributor/dealer where you purchased this product.

Replacing the Brake Roller

1 **Turn off the scanner, unplug the power cable, then wait for at least 15 minutes until the temperature inside the ADF lowers.**

➡ How to Turn the Power OFF (page 46)

2 **Remove all documents from the ADF paper chute (feeder).**

3 **Open the ADF.**

➡ How to Open the ADF (page 49)

> CAUTION When the ADF is open, it might close accidentally. Be careful not to get your fingers caught.

4 **Open the brake roller cover in the direction of the arrow.**

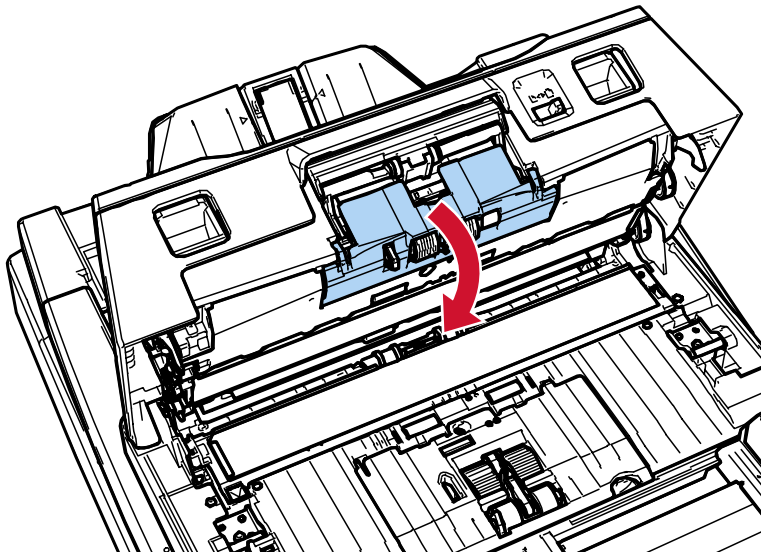

5 **Remove the brake roller.**

Lift the left side of the roller in the direction of the arrow ① first, then pull out the shaft from the slot on the right in the direction of the arrow ②.

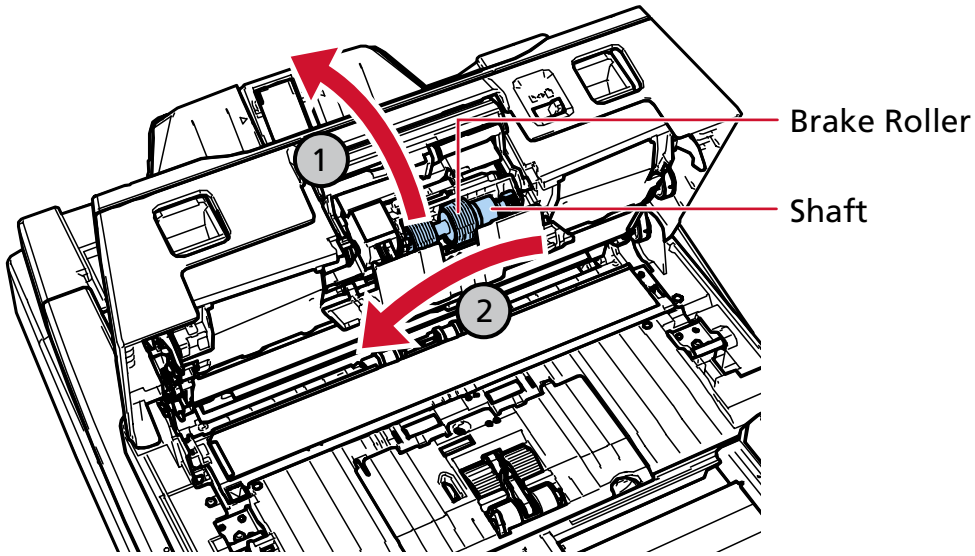

6 Remove the brake roller from its shaft.

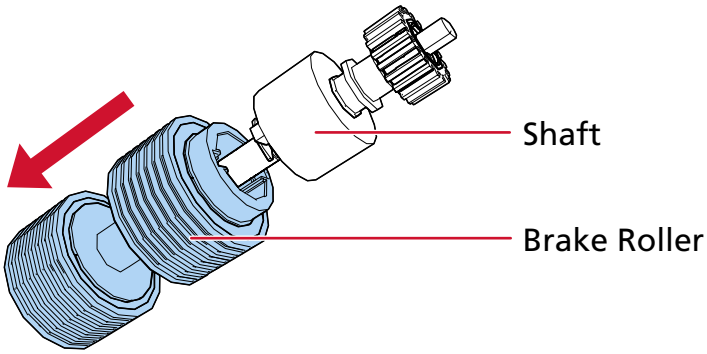

7 Attach a new brake roller on the shaft.

Insert the protrusion on the shaft into the slot.

Make sure you insert the roller until it locks in place, indicated by a clicking sound.

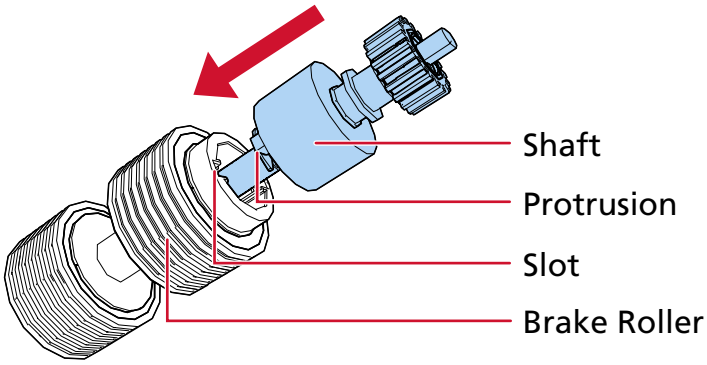

Confirm that the brake roller is installed properly. Otherwise, paper jams may occur.

8 Attach the brake roller.

Insert the right end of the shaft into the hole in accordance with the hole shape in the direction of the arrow ①, and then attach the left side of the shaft in the direction of the arrow ②.

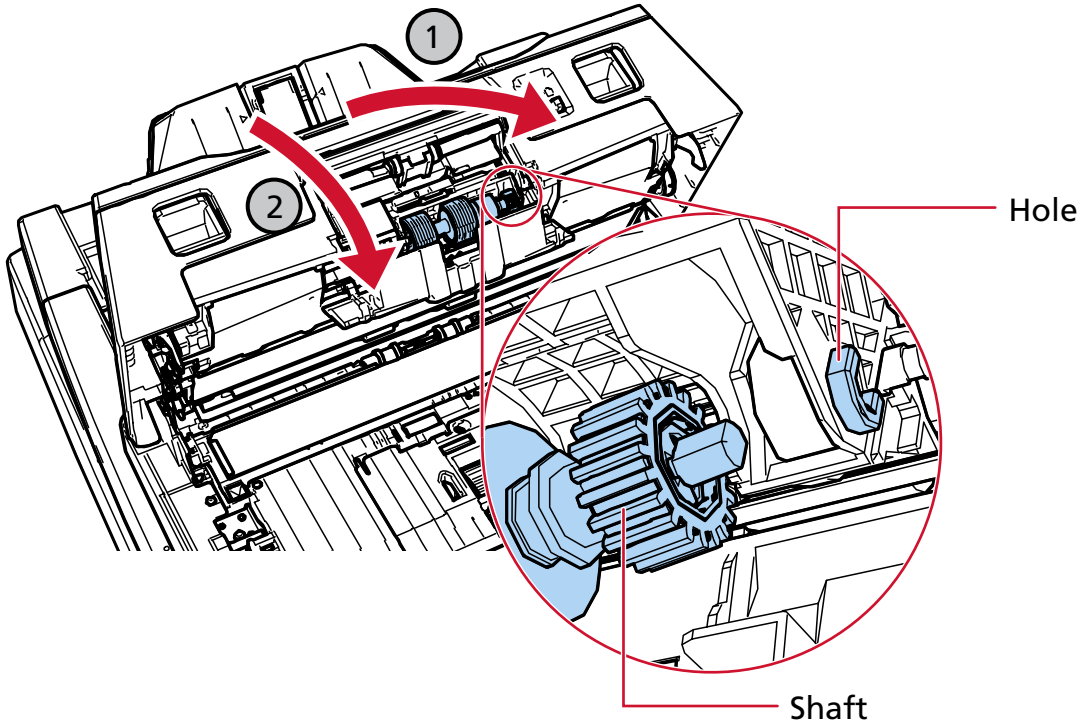

Confirm that the brake roller is installed properly. Otherwise, paper jams may occur.

9 Close the brake roller cover.

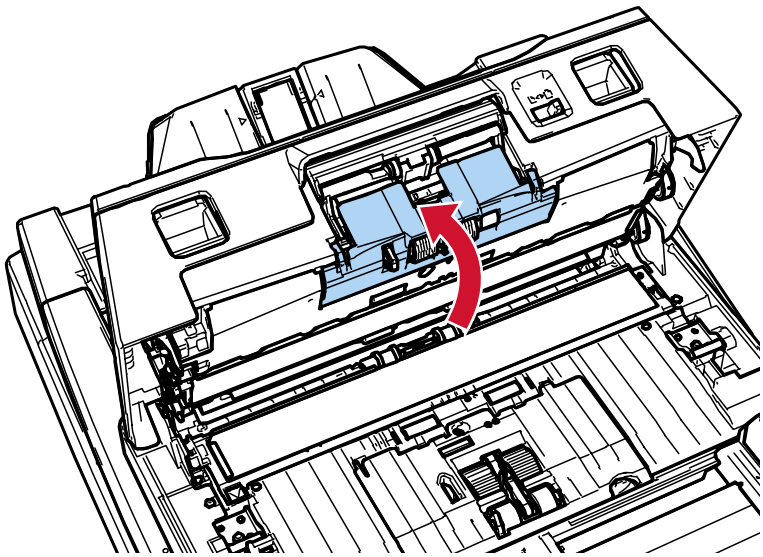

10 Close the ADF.

➡ How to Close the ADF (page 50)

> **CAUTION** Be careful not to get your fingers caught when closing the ADF.

11 Plug in the power cable and turn on the scanner.

➡ How to Turn the Power ON (page 44)

12 Use one of the following methods to clear the brake roller counter.

- [5:Consumable counters] on the [Settings Menu] screen of the operator panel

  ➡ How to Use the Settings Menu (page 109)

- Software Operation Panel

  ➡ Clearing the Sheet Counters (page 279)

Replacing the Pick Roller

There are two types of pick rollers. When replacing pick rollers, make sure you replace both types at the same time.

1 **Turn off the scanner, unplug the power cable, then wait for at least 15 minutes until the temperature inside the ADF lowers.**

➡ How to Turn the Power OFF (page 46)

2 **Remove all documents from the ADF paper chute (feeder).**

3 **Open the ADF.**

➡ How to Open the ADF (page 49)

> CAUTION When the ADF is open, it might close accidentally. Be careful not to get your fingers caught.

4 **Open the sheet guide.**

Slide the side guides all the way while pressing the side guide buttons (1), and pull the sheet guide open from the dip (2).

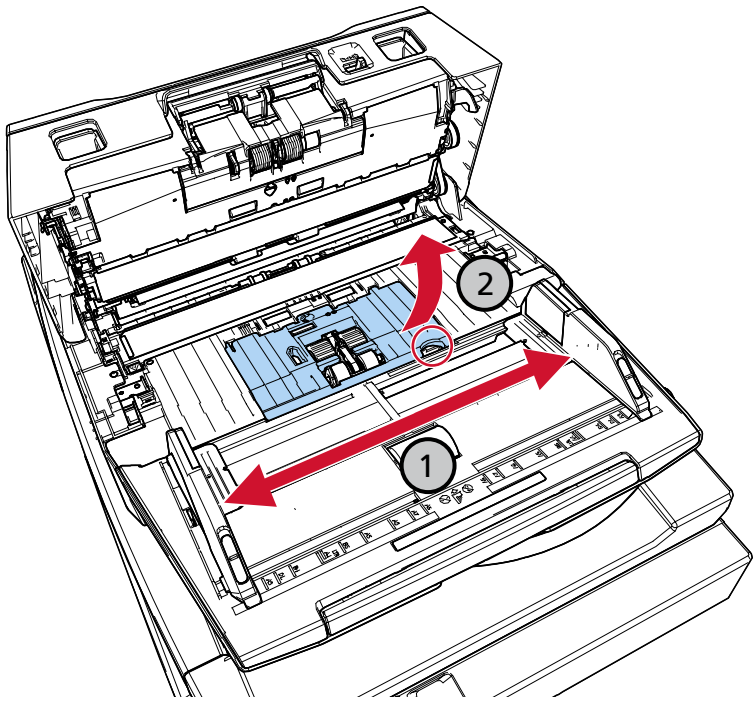

5 **Remove the pick roller that is closer to you.**

a Rotate the bushings (× 2) on the shaft in the direction of the arrow.

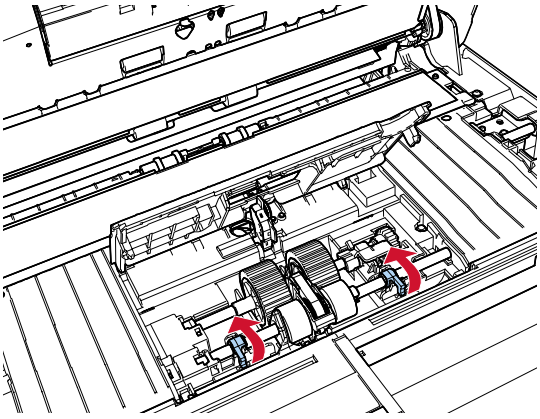

b Slide the bushings (× 2) on the shaft in the direction of the arrow.

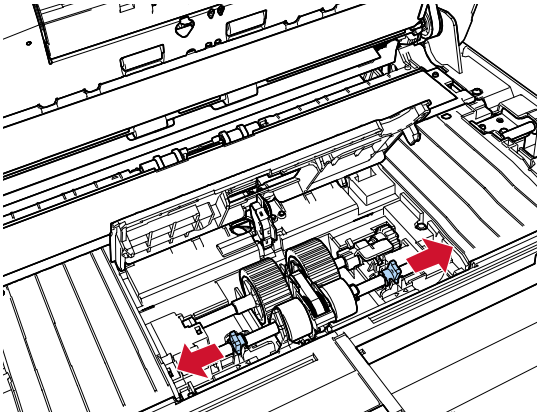

c Remove the pick roller.

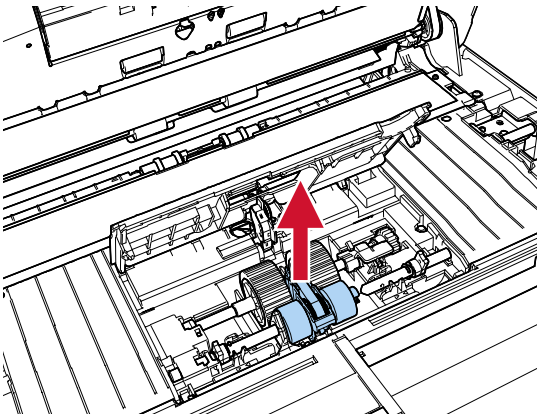

6 Remove the pick roller that is away from you.

a Rotate the bushing on the shaft in the direction of the arrow.

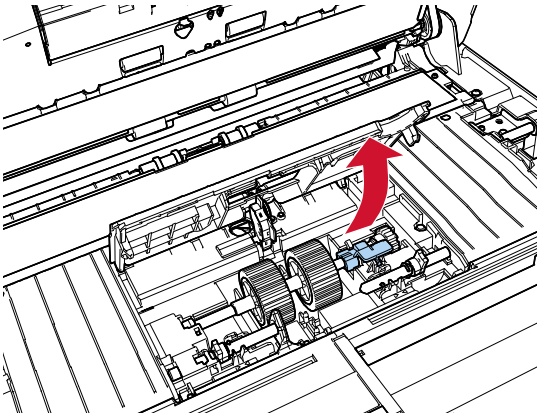

b Lift up the bushing in direction ① (about 5 mm), and slide the shaft in direction ② to pull out the leading end from the slot, then lift the shaft in direction ③ to remove it.

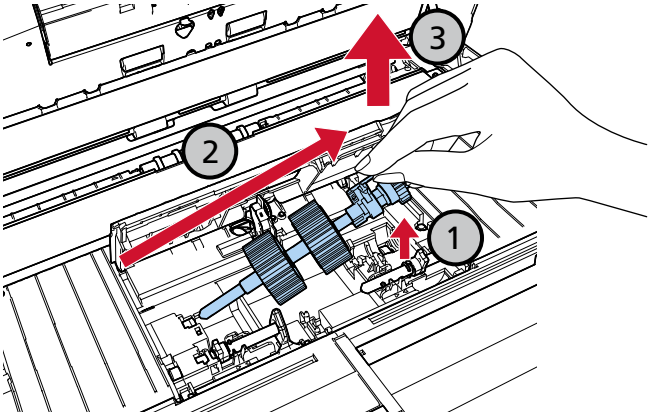

The gear near the bushing on the shaft has grease over it. Be careful not to touch the gear.

7 Remove the pick rollers (× 2) one by one from the shaft.

a Pull out the pick roller from the shaft as you lift the retaining clip.

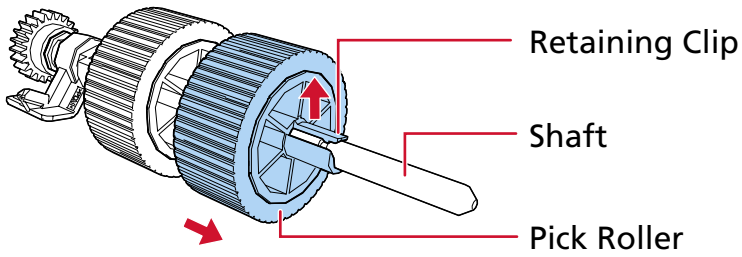

b Pull out the other pick roller from the shaft as you lift the retaining clip.

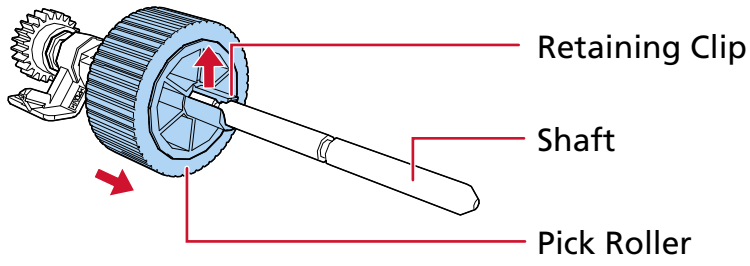

8 Attach new pick rollers (× 2) on the shaft one by one.

a Hold the bushing of the shaft in one hand and the pick roller with the retaining clip facing towards you in the other hand, and then put the pick roller on the shaft in the direction of the arrow (1). If you rotate the pick roller in the direction of the arrow (2), you can put it on the shaft more easily.

Make sure you insert the roller until it locks in place, indicated by a clicking sound.

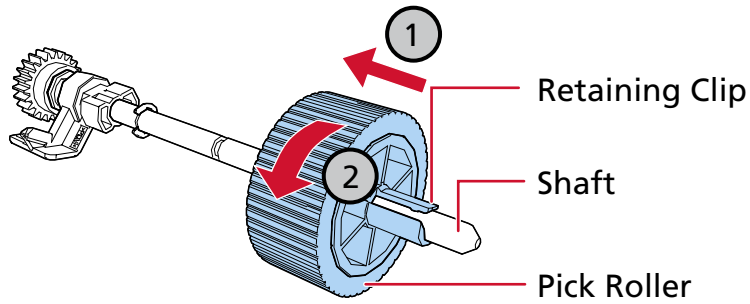

Confirm that the pick rollers are installed properly. Otherwise, paper jams may occur.

b Hold the bushing of the shaft in one hand and the other pick roller with the retaining clip facing towards you in the other hand, and then put the pick roller on the shaft in the direction of the arrow (1). If you rotate the pick roller in the direction of the arrow (2), you can put it on the shaft more easily.

Make sure you insert the roller until it locks in place, indicated by a clicking sound.

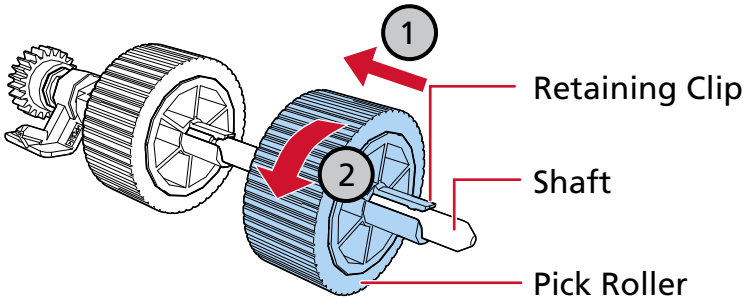

Confirm that the pick rollers are installed properly. Otherwise, paper jams may occur.

9 Install the pick roller in the position away from you.

a Insert the left end of the shaft into the slot, and lower the other end gradually.

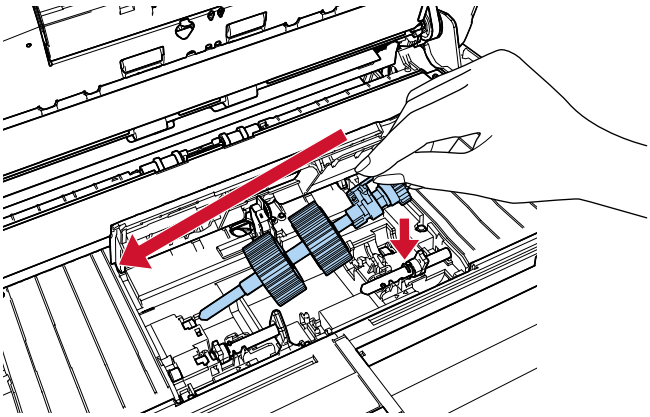

b Rotate the bushing on the shaft in the direction of the arrow.

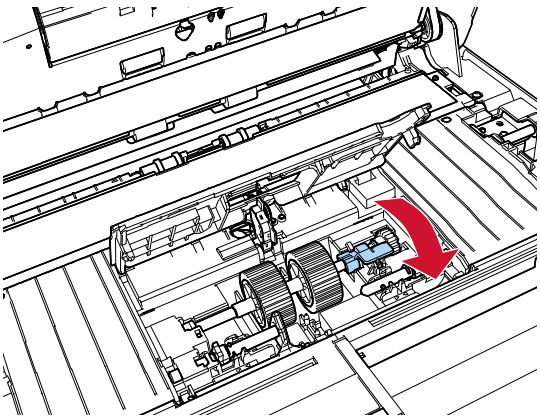

10 Install the new pick roller in the position closer to you.

a Insert the protrusions (× 2) on the scanner into the holes (× 2) on the pick roller.

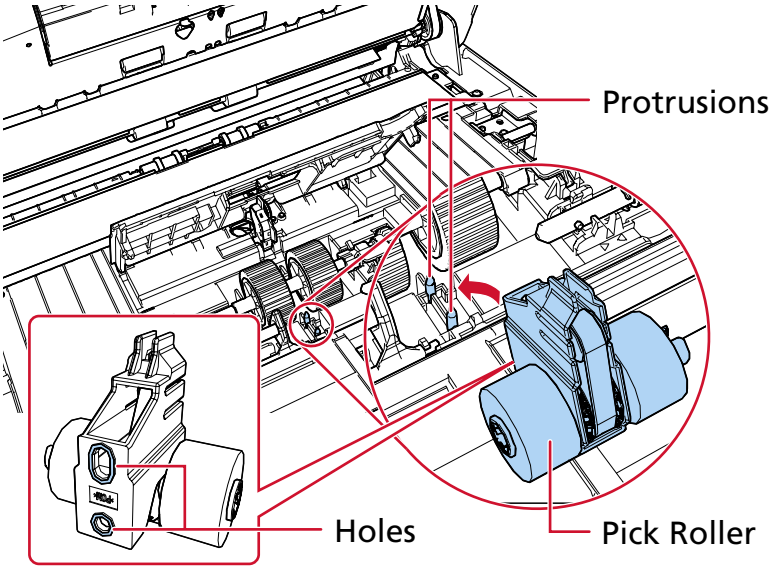

b Slide the bushing on the left shaft in the direction of the arrow.

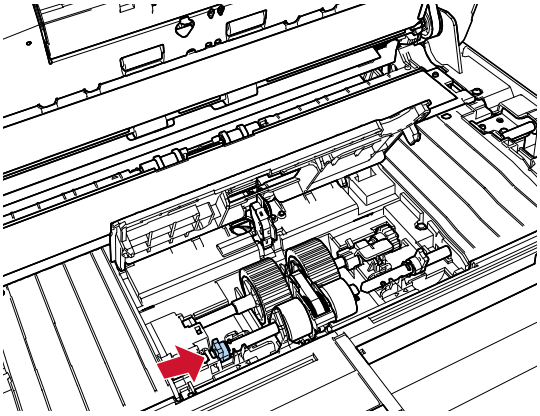

c Fit the protrusion on the right shaft into the notch on the pick roller and slide the bushing on the right shaft in the direction of the arrow.

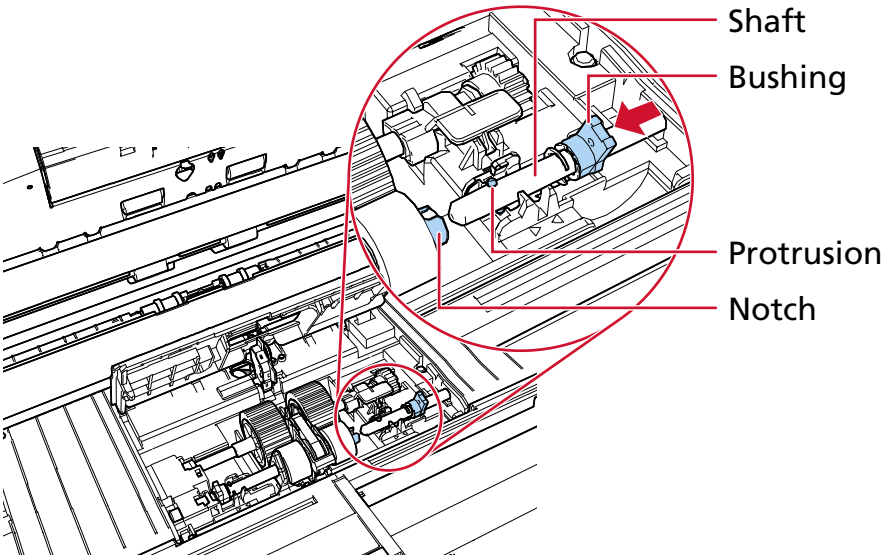

d Rotate the bushings (× 2) on the shaft in the direction of the arrow.

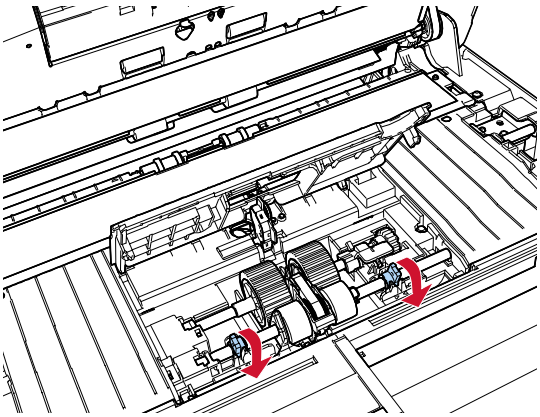

Confirm that the pick rollers are installed properly. Otherwise, paper jams may occur.

11 Close the sheet guide.

Make sure that both ends of the sheet guide are locked firmly.

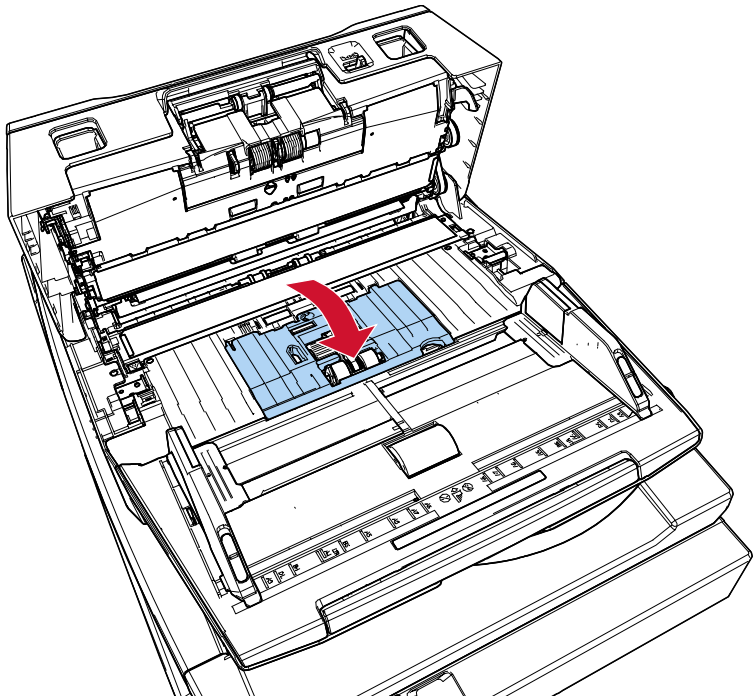

12 **Close the ADF.**

➡ How to Close the ADF (page 50)

> **CAUTION** Be careful not to get your fingers caught when closing the ADF.

13 **Plug in the power cable and turn on the scanner.**

➡ How to Turn the Power ON (page 44)

14 **Use one of the following methods to clear the pick roller counter.**

- [5:Consumable counters] on the [Settings Menu] screen of the operator panel

  ➡ How to Use the Settings Menu (page 109)

- Software Operation Panel

  ➡ Clearing the Sheet Counters (page 279)

Troubleshooting

This section explains about the countermeasures against paper jams and other troubles, items to check before contacting your scanner service provider, and how to read the product label on the scanner.

ATTENTION

For details about other errors/troubles that are not covered in this section, refer to the manual/help for your scanner drive and image scanning application.

When a Paper Jam Occurs

Remove the documents that are left in the ADF in the following procedure:

CAUTION

- Do not use force to pull out jammed documents, and make sure to open the ADF first.
- Be careful not to touch any sharp parts when removing jammed documents. Doing so could result in injury.
- Be careful not to get things such as hair, a tie or necklaces caught inside the scanner when removing jammed documents.
- The inside of the ADF may become extremely hot during operation. Be careful not to burn yourself.

1 Remove all documents from the ADF paper chute (feeder).

2 Open the ADF.

➡ How to Open the ADF (page 49)

CAUTION

When the ADF is open, it might close accidentally. Be careful not to get your fingers caught.

3 Remove the jammed document.

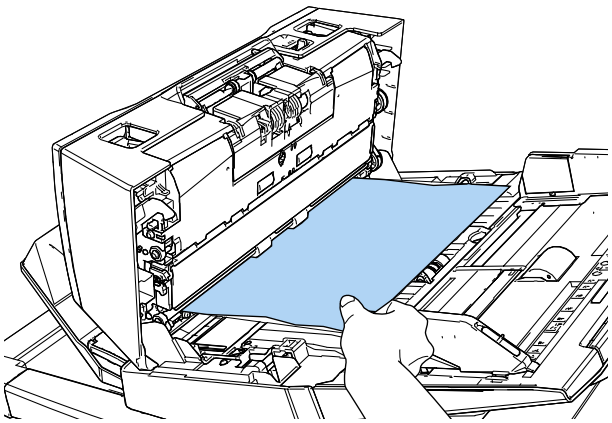

ATTENTION

- Make sure to check the documents and the paper path thoroughly. Remove any metal objects such as staples or paper clips to prevent paper jams.
- Be careful not to damage the glass surface and the guides when removing documents with metal objects such as staples or paper clips.

4 Close the ADF.

➡ How to Close the ADF (page 50)

CAUTION Be careful not to get your fingers caught when closing the ADF.

ATTENTION

- Confirm that the ADF is closed properly. Otherwise, documents may not be fed into the ADF.
- Occasionally when scanning is complete or canceled, documents may remain in the ADF without any error message displayed. In that case, follow steps 1 through 4 above to remove the documents.
- To continue scanning, check which page you want to resume from, and load the document in the ADF paper chute (feeder) again.

Errors

- **Error Indication**

  When an error occurs while the scanner is used, error information is displayed in the following two locations.

  - LCD (page 201)
  - Error Recovery Guide Window (page 202)

- **LCD**

  When an error occurs while the scanner is used, an error code and an error message are displayed on the LCD.
  You can clear the error display by pressing the [Stop/Clear] button.
  Note that for a paper jam, the message disappears after a certain amount of time elapses with no documents ([Ready] status) in the scanner.

  - fi-8600

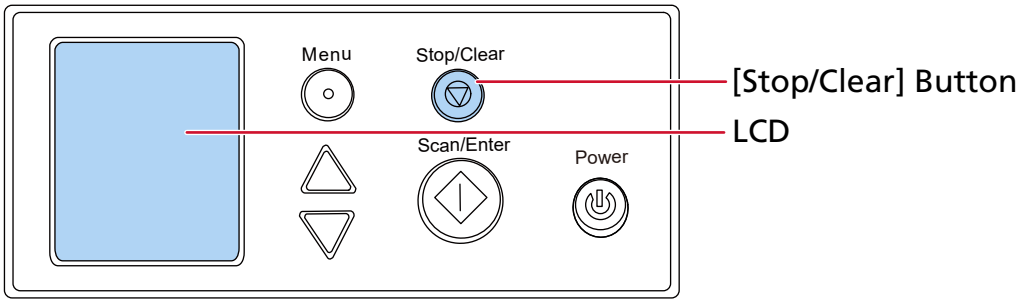

● fi-8700/fi-8700S

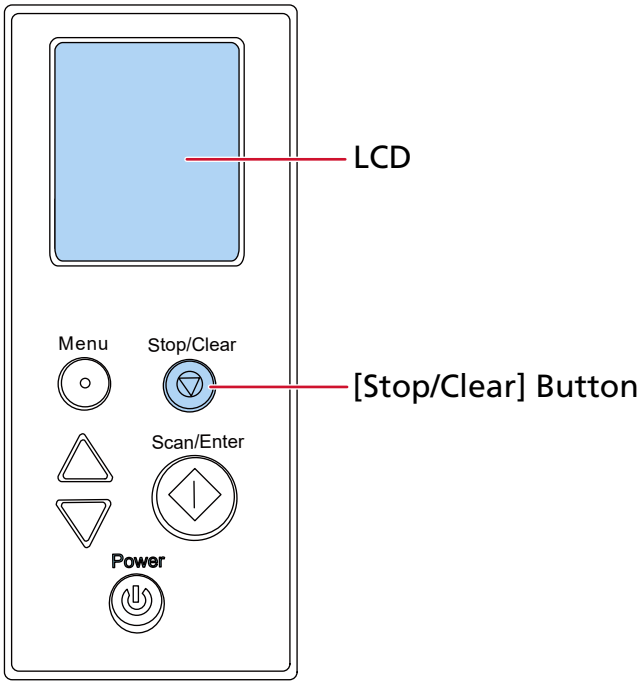

- **Error Recovery Guide Window**

  When an error occurs while the scanner is used, the error name and code are displayed in the Error Recovery Guide window.
  When you sign in to Windows, Error Recovery Guide is started up and the Error Recovery Guide icon is displayed in the notification area at the far right of the taskbar.
  Take note of the displayed information and click the [More Info] button to check the troubleshooting procedure.

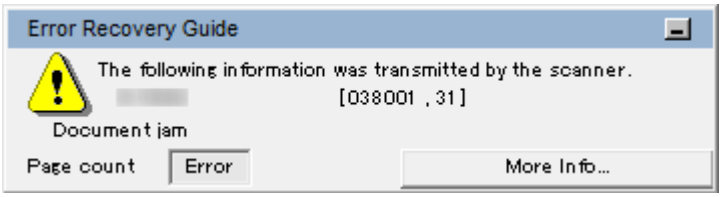

- **Error List**

LCD		Error Recovery Guide Window	Refer to
Error Code	**Error Message Summary**		
A1:B3 Error	Imprinter error (communication timeout)	Imprinter error (communication timeout)	Imprinter Error (When the Imprinter Is Installed) [fi-8600] (page 206)
A2:B5 Error	Imprinter error (print head)	Imprinter error (print head)	
A3:B6 Error	Imprinter error (EEPROM)	Imprinter error (EEPROM)	

LCD		Error Recovery Guide Window	Refer to
Error Code	Error Message Summary		
A4:B8 Error	Imprinter error (ROM)	Imprinter error (ROM)	
C0:E5 Error	Memory error (Front)	Memory malfunction	Memory Error/LSI Error (page 206)
C0:E6 Error	Memory error (Back)		
C0:E9 Error	LSI error (Front)	LSI malfunction	
C0:EA Error	LSI error (Back)		
E0:87 Error	FB carrier error	Flatbed motor malfunction	Flatbed Carrier Error [fi-8700/fi-8700S] (page 207)
E1:7E Error	Optical error (FB)	Optical error (Flatbed)	Optical Error (Flatbed) [fi-8700/fi-8700S] (page 207)
E2:74 Error	Optical error (ADF Front)	Optical error (ADF front)	Optical Error (ADF) (page 208)
E3:75 Error	Optical error (ADF Back)	Optical error (ADF back)	
E6:D3 Error	Operator Panel error	Operator Panel error	Operator Panel Error (page 208)
E7:D2 Error	EEPROM error	EEPROM error	EEPROM Error (page 209)
E9:F5 Error	Image memory read-write error (Front)	Image memory read-write error (F)	Image Memory Read-Write Error (page 209)
E9:F6 Error	Image memory read-write error (Back)	Image memory read-write error (B)	
F2:C4 Error	Pick arm malfunction	Pick arm malfunction	Pick Arm Malfunction (page 210)
F4:C2 Error	Background switching mechanism error (ADF Front)	Background changeover unit failure	Background Switching Mechanism Error (page 210)
F4:C3 Error	Background switching mechanism error (ADF Back)		
H0:83 Error	Motor circuit error	Motor circuit error	Motor Circuit Error (page 211)
H1:80 Error			
H2:81 Error			
H6:B1 Error	Imprinter system error	Imprinter system error	Imprinter System Error (When the Imprinter Is

LCD		Error Recovery Guide Window	Refer to
Error Code	Error Message Summary		
			Installed) [fi-8600] (page 211)
H7:84 Error	Lamp circuit error	Lamp fuse malfunction	Lamp Circuit Error (page 212)
H8:88 Error	Motor circuit error	Motor circuit error	Motor Circuit Error (page 211)
J0:37 Error	Paper protection (feeding noise)	Stopped scanning to prevent paper damage.	Paper Damage Prevention (page 212)
J0:51 Error	Paper protection (feeding accuracy)		
J1:31 Error	Paper jam	Document jam	Paper Jam/Pick Error (page 213)
J1:36 Error			
J1:50 Error	Pick error		
J1:5A Error	Paper jam	Document jam	Paper Jam (When the Imprinter Is Installed) [fi-8600] (page 213)
J2:55 Error	Multifeed detected (Overlap)	Multifeed	Multifeed (page 214)
J2:56 Error	Multifeed detected (Length)		
J7:5F Error	Feed mode switched	Feed mode switched	Feed Mode Switched (page 214)
J8:01 Error	Sensor(s) dirty	Sensor(s) Dirty	Sensor(s) Dirty (page 214)
J8:04 Error			
J9:39 Error	Paper jam	Document jam(Dirty rollers)	Paper Jam/Pick Error (page 213)
L0:11 Error	Sensor error	Sensor malfunction	Sensor Error (page 215)
L2:13 Error			
L6:1B Error			
M1:D5 Error	Wired LAN error	—	Wired LAN error (page 216)
M4:AB Error	Network error	—	Network Setting Error (page 216)

LCD		Error Recovery Guide Window	Refer to
Error Code	Error Message Summary		
U0:10 Error	Transport lock error	Transport lock malfunction	Transport Lock Error [fi-8700/fi-8700S] (page 217)
U4:40 Error	ADF open	Cover open	ADF Open (page 217)
U5:4A Error	Imprinter Cover Open	Cover open	Imprinter Cover Open (When the Imprinter Is Installed) [fi-8600] (page 218)
U6:B4 Error	Print cartridge not installed	Print Cartridge Not Installed	Print Cartridge Not Installed (When the Imprinter Is Installed) [fi-8600] (page 218)
U7:B9 Error	Imprinting area error	Imprinter paper detection failure or imprinting area error	Imprinting Area Error (When the Imprinter Is Installed) [fi-8600] (page 218)
—	—	Being used by others	Being Used by Others (page 219)
—	No Paper	—	No Paper (page 219)
—	Stop	—	Stop (page 219)
—	Pause	—	Pause (page 219)

Imprinter Error (When the Imprinter Is Installed) [fi-8600]

If an error occurs in the imprinter, the following error information is displayed.

LCD		Error Recovery Guide Window
Error Code	Error Message	
A1:B3 Error	Imprinter error (communication timeout) Turn the power back on. If the problem persists, refer to the Operator's Guide and take measures accordingly.	Imprinter error (communication timeout)
A2:B5 Error	Imprinter error (print head) Turn the power back on. If the problem persists, refer to the Operator's Guide and take measures accordingly.	Imprinter error (print head)
A3:B6 Error	Imprinter error (EEPROM) Turn the power back on. If the problem persists, refer to the Operator's Guide and take measures accordingly.	Imprinter error (EEPROM)
A4:B8 Error	Imprinter error (ROM) Turn the power back on. If the problem persists, refer to the Operator's Guide and take measures accordingly.	Imprinter error (ROM)

Take the following measures.

- Refer to the fi-760PRB Imprinter Operator Guide to check if the print cartridge is installed correctly.
- Refer to the fi-760PRB Imprinter Operator's Guide to reconnect the EXT cable.
- Turn the scanner off then back on.

If the problem still persists, write down the error code, check each item in Before You Contact the Scanner Service Provider (page 256) and then contact the distributor/dealer where you purchased this product.

Memory Error/LSI Error

If a memory error or LSI error occurs, the following error information is displayed.

LCD		Error Recovery Guide Window
Error Code	Error Message	
C0:E5 Error	Memory error (Front) Turn the power back on. If the problem persists, refer to the Operator's Guide and take measures accordingly.	Memory malfunction

LCD		Error Recovery Guide Window
Error Code	Error Message	
C0:E6 Error	Memory error (Back) Turn the power back on. If the problem persists, refer to the Operator's Guide and take measures accordingly.	
C0:E9 Error	LSI error (Front) Turn the power back on. If the problem persists, refer to the Operator's Guide and take measures accordingly.	LSI malfunction
C0:EA Error	LSI error (Back) Turn the power back on. If the problem persists, refer to the Operator's Guide and take measures accordingly.	

Turn the scanner off then back on.
If the problem still persists, write down the error code, check each item in Before You Contact the Scanner Service Provider (page 256) and then contact the distributor/dealer where you purchased this product.

Flatbed Carrier Error [fi-8700/fi-8700S]

If a flatbed carrier error occurs, the following error information is displayed.

LCD		Error Recovery Guide Window
Error Code	Error Message	
E0:87 Error	FB carrier error Unlock the transport lock switch.	Flatbed motor malfunction

Check that the transport lock is not locked.
If the transport lock is locked, unlock the transport lock.

➔ Transport Lock Error [fi-8700/fi-8700S] (page 217)
If the problem still persists, write down the error code, check each item in Before You Contact the Scanner Service Provider (page 256) and then contact the distributor/dealer where you purchased this product.

Optical Error (Flatbed) [fi-8700/fi-8700S]

If an optical error occurs in the flatbed, the following error information is displayed.

LCD		Error Recovery Guide Window
Error Code	Error Message	
E1:7E Error	Optical error (FB)	Optical error (Flatbed)

LCD		Error Recovery Guide Window
Error Code	Error Message	
	Turn the power back on. If the problem persists, refer to the Operator's Guide and take measures accordingly.	

Take the following measures.

- Check that the transport lock is not locked.
  If the transport lock is locked, unlock the transport lock.

  ➡ Transport Lock Error [fi-8700/fi-8700S] (page 217)

- Refer to Cleaning the Inside of the Scanner (Flatbed) [fi-8700/fi-8700S] (page 182) and clean the document bed (glass section).

- Turn the scanner off then back on.

If the problem still persists, write down the error code, check each item in Before You Contact the Scanner Service Provider (page 256) and then contact the distributor/dealer where you purchased this product.

Optical Error (ADF)

If an optical error occurs in the ADF, the following error information is displayed.

LCD		Error Recovery Guide Window
Error Code	Error Message	
E2:74 Error	Optical error (ADF Front) Turn the power back on. If the problem persists, refer to the Operator's Guide and take measures accordingly.	Optical error (ADF front)
E3:75 Error	Optical error (ADF Back) Turn the power back on. If the problem persists, refer to the Operator's Guide and take measures accordingly.	Optical error (ADF back)

Take the following measures.

- Refer to Cleaning the Inside of the Scanner (ADF) with a Cloth (page 175) and clean the glass.

- Turn the scanner off then back on.

If the problem still persists, write down the error code, check each item in Before You Contact the Scanner Service Provider (page 256) and then contact the distributor/dealer where you purchased this product.

Operator Panel Error

If an operator panel error occurs, the following error information is displayed.

LCD		Error Recovery Guide Window
Error Code	Error Message	
E6:D3 Error	Operator Panel error Turn the power back on. If the problem persists, refer to the Operator's Guide and take measures accordingly.	Operator Panel error

Turn the scanner off then back on.
If the problem still persists, write down the error code, check each item in Before You Contact the Scanner Service Provider (page 256) and then contact the distributor/dealer where you purchased this product.

EEPROM Error

If an EEPROM error occurs, the following error information is displayed.

LCD		Error Recovery Guide Window
Error Code	Error Message	
E7:D2 Error	EEPROM error Turn the power back on. If the problem persists, refer to the Operator's Guide and take measures accordingly.	EEPROM error

Turn the scanner off then back on.
If the problem still persists, write down the error code, check each item in Before You Contact the Scanner Service Provider (page 256) and then contact the distributor/dealer where you purchased this product.

Image Memory Read-Write Error

If an error occurs when data is read from the image memory or written on the image memory, the following error information is displayed.

LCD		Error Recovery Guide Window
Error Code	Error Message	
E9:F5 Error	Image memory read-write error (Front) Turn the power back on. If the problem persists, refer to the Operator's Guide and take measures accordingly.	Image memory read-write error (F)
E9:F6 Error	Image memory read-write error (Back) Turn the power back on. If the problem persists, refer to the Operator's Guide and take measures accordingly.	Image memory read-write error (B)

Turn the scanner off then back on.
If the problem still persists, write down the error code, check each item in Before You Contact the Scanner Service Provider (page 256) and then contact the distributor/dealer where you purchased this product.

Pick Arm Malfunction

When a pick arm malfunction occurs, the following error information is displayed.

LCD		Error Recovery Guide Window
Error Code	Error Message	
F2:C4 Error	Pick arm malfunction Turn the power back on. If the problem persists, refer to the Operator's Guide and take measures accordingly.	Pick arm malfunction

Turn the scanner off then back on.
If the problem still persists, write down the error code, check each item in Before You Contact the Scanner Service Provider (page 256) and then contact the distributor/dealer where you purchased this product.

Background Switching Mechanism Error

If a background switching mechanism error occurs, the following error information is displayed.

LCD		Error Recovery Guide Window
Error Code	Error Message	
F4:C2 Error	Background switching mechanism error (ADF Front) Turn the power back on. If the problem persists, refer to the Operator's Guide and take measures accordingly.	Background changeover unit failure
F4:C3 Error	Background switching mechanism error (ADF Back) Turn the power back on. If the problem persists, refer to the Operator's Guide and take measures accordingly.	

Open the ADF to check that there are no documents remaining, and then turn the scanner off then back on.
If the problem still persists, write down the error code, check each item in Before You Contact the Scanner Service Provider (page 256) and then contact the distributor/dealer where you purchased this product.

Motor Circuit Error

If a motor circuit error occurs, the following error information is displayed.

LCD		Error Recovery Guide Window
Error Code	Error Message	
H0:83 Error	Motor circuit error Turn the power back on. If the problem persists, refer to the Operator's Guide and take measures accordingly.	Motor circuit error
H1:80 Error	Motor circuit error Turn the power back on. If the problem persists, refer to the Operator's Guide and take measures accordingly.	
H2:81 Error	Motor circuit error Turn the power back on. If the problem persists, refer to the Operator's Guide and take measures accordingly.	
H8:88 Error	Motor circuit error Turn the power back on. If the problem persists, refer to the Operator's Guide and take measures accordingly.	

Turn the scanner off then back on.
If the problem still persists, write down the error code, check each item in Before You Contact the Scanner Service Provider (page 256) and then contact the distributor/dealer where you purchased this product.

Imprinter System Error (When the Imprinter Is Installed) [fi-8600]

If a circuit error occurs in the imprinter, the following error information is displayed.

LCD		Error Recovery Guide Window
Error Code	Error Message	
H6:B1 Error	Imprinter system error Turn the power back on. If the problem persists, refer to the Operator's Guide and take measures accordingly.	Imprinter system error

Turn the scanner off then back on.
If the problem still persists, write down the error code, check each item in Before You Contact the Scanner Service Provider (page 256) and then contact the distributor/dealer where you purchased this product.

Lamp Circuit Error

If a lamp circuit error occurs, the following error information is displayed.

LCD		Error Recovery Guide Window
Error Code	Error Message	
H7:84 Error	Lamp circuit error Turn the power back on. If the problem persists, refer to the Operator's Guide and take measures accordingly.	Lamp fuse malfunction

Turn the scanner off then back on.
If the problem still persists, write down the error code, check each item in Before You Contact the Scanner Service Provider (page 256) and then contact the distributor/dealer where you purchased this product.

Paper Damage Prevention

When the paper protection function is activated, paper feeding stops, and the following error information is displayed.

LCD		Error Recovery Guide Window
Error Code	Error Message	
J0:37 Error	Paper protection (feeding noise) Remove the document. Be careful not to get the document jammed or skewed when reloading it. For details, refer to the Operator's Guide.	Stopped scanning to prevent paper damage.
J0:51 Error	Paper protection (feeding accuracy) Remove the document. Be careful not to get the document jammed or skewed when reloading it. For details, refer to the Operator's Guide.	

The function to protect documents (Paper protection) prevents documents from being damaged during scanning with the ADF by increasing the level of sensitivity to detect paper jams.
Take the following measures.

- If this error occurs, check if the document meets the requirements described in Documents for Scanning (page 83).
- If this error occurs frequently even when the document meets the requirements for scanning, lower the paper protection sensitivity level.
- If documents remain in the ADF, remove the documents by referring to When a Paper Jam Occurs (page 199).

Paper Jam/Pick Error

If a paper jam or pick error occurs, the following error information is displayed.

LCD		Error Recovery Guide Window
Error Code	Error Message	
J1:31 Error	Paper jam Remove the document.	Document jam
J1:36 Error	Paper jam Remove the document.	
J1:50 Error	Pick error Remove the document.	
J9:39 Error	Paper jam Please clean rollers.	Document jam(Dirty rollers)

Take the following measures.

- When a paper jam occurs inside the scanner, refer to When a Paper Jam Occurs (page 199) to remove jammed documents.
- Refer to Documents for Scanning (page 83) in order to check if the document is suitable for scanning.
- If paper jams occur frequently, take measures according to Paper Jams/Pick Errors Occur Frequently (page 240).
- Refer to Daily Care (page 168) and clean the rollers.

If the problem still persists, write down the error code, check each item in Before You Contact the Scanner Service Provider (page 256) and then contact the distributor/dealer where you purchased this product.

Paper Jam (When the Imprinter Is Installed) [fi-8600]

If a paper jam occurs in the imprinter, the following error information is displayed.

LCD		Error Recovery Guide Window
Error Code	Error Message	
J1:5A Error	Paper jam Remove the document.	Document jam

Take the following measures.

- When a paper jam occurs in the imprinter, refer to the fi-760PRB Imprinter Operator's Guide to remove jammed documents.
- Refer to the fi-760PRB Imprinter Operator's Guide to make sure that the document satisfies the requirements for documents that can be fed into the imprinter
- Refer to the fi-760PRB Imprinter Operator's Guide to clean the rollers.

If the problem still persists, write down the error code, check each item in Before You Contact the Scanner Service Provider (page 256) and then contact the distributor/dealer where you purchased this product.

Multifeed

If a multifeed occurs, the following error information is displayed.

LCD		Error Recovery Guide Window
Error Code	Error Message	
J2:55 Error	Multifeed detected (Overlap) Press the [Scan/Enter] button. If there is a document that is being fed, it will be ejected.	Multifeed
J2:56 Error	Multifeed detected (Length) Press the [Scan/Enter] button. If there is a document that is being fed, it will be ejected.	

If documents remain in the scanner, refer to When a Paper Jam Occurs (page 199) to remove the documents.
If documents are overlapped and fed into the scanner frequently, take measures according to Overlapped Documents Are Frequently Fed into the Scanner (page 233).
If the problem still persists, write down the error code, check each item in Before You Contact the Scanner Service Provider (page 256) and then contact the distributor/dealer where you purchased this product.

Feed Mode Switched

If the feed mode is switched during a scan, the following error information is displayed.

LCD		Error Recovery Guide Window
Error Code	Error Message	
J7:5F Error	Feed mode switched Check the feed mode switch setting, reload the documents and try again.	Feed mode switched

Check the position of the feed mode switch.
If documents remain in the ADF, remove the documents by referring to When a Paper Jam Occurs (page 199).
If the problem still persists, write down the error code, check each item in Before You Contact the Scanner Service Provider (page 256) and then contact the distributor/dealer where you purchased this product.

Sensor(s) Dirty

If sensors are dirty, the following error information is displayed.

LCD		Error Recovery Guide Window
Error Code	Error Message	
J8:01 Error	Sensor(s) dirty Clean the Pick Sensor.	Sensor(s) Dirty
J8:04 Error	Sensor(s) dirty Clean the READ-TOP Sensor.	

Take the following measures.

- Clean the document sensors by referring to Cleaning the Inside of the Scanner (ADF) with a Cloth (page 175).
- Turn the scanner off then back on.

If the problem still persists, write down the error code, check each item in Before You Contact the Scanner Service Provider (page 256) and then contact the distributor/dealer where you purchased this product.

Sensor Error

If a sensor error occurs, the following error information is displayed.

LCD		Error Recovery Guide Window
Error Code	Error Message	
L0:11 Error	Sensor error Turn the power back on. If the problem persists, refer to the Operator's Guide and take measures accordingly.	Sensor malfunction
L2:13 Error	Sensor error Turn the power back on. If the problem persists, refer to the Operator's Guide and take measures accordingly.	
L6:1B Error	Sensor error Turn the power back on. If the problem persists, refer to the Operator's Guide and take measures accordingly.	

Take the following measures.

- Refer to Cleaning the Inside of the Scanner (ADF) with a Cloth (page 175) to clean the ultrasonic sensors.
- Turn the scanner off then back on.

If the problem still persists, write down the error code, check each item in Before You Contact the Scanner Service Provider (page 256) and then contact the distributor/dealer where you purchased this product.

Wired LAN error

If a wired LAN error occurs, the following error information is displayed.

LCD		Error Recovery Guide Window
Error Code	Error Message	
M1:D5 Error	Wired LAN error Turn the power back on. If the problem persists, refer to the Operator's Guide and take measures accordingly.	—

Turn the scanner off then back on.
If the problem still persists, write down the error code, check each item in Before You Contact the Scanner Service Provider (page 256) and then contact the distributor/dealer where you purchased this product.

Network Setting Error

When a network setting error occurs, the following error information is displayed.

LCD		Error Recovery Guide Window
Error Code	Error Message	
M4:AB Error	Network error Cannot send data. Refer to the Operator's Guide and take measures accordingly.	—

Take the following measures.

- Check the network settings for the scanner.
  The network settings for the scanner can be checked using one of the following methods.
  - [1:Scanner Information] on the [Settings Menu] screen of the operator panel

    ➡ How to Use the Settings Menu (page 109)
  - IP Address Setting Tool
    For details, refer to the Network Setup Tool Help.
    For details about how to start up IP Address Setting Tool, refer to Starting Up IP Address Setting Tool (page 354).
  - fi Series Network Settings

    ➡ Network Settings (fi Series Network Settings) (page 326)
- Check the network connection.

If the problem still persists, write down the error code, check each item in Before You Contact the Scanner Service Provider (page 256) and then contact the distributor/dealer where you purchased this product.

Transport Lock Error [fi-8700/fi-8700S]

If a transport lock error occurs, the following error information is displayed.

LCD		Error Recovery Guide Window
Error Code	Error Message	
U0:10 Error	Transport lock error Unlock the transport lock switch.	Transport lock malfunction

Check that the transport lock is not locked.
If the transport lock is locked, use a coin or similar tool to turn the transport lock switch until the slot is in the vertical position to unlock the transport lock.

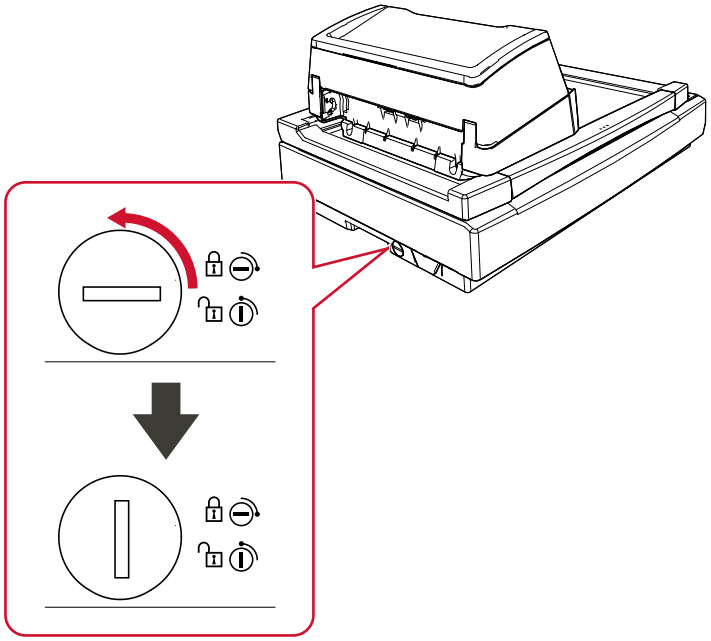

ADF Open

If you open the ADF during a scan, the following error information is displayed.
If you open the ADF while the scanner is in standby, only the error message appears on the LCD without the error code.

LCD		Error Recovery Guide Window
Error Code	Error Message	
U4:40 Error	ADF open	Cover open

Remove the document from the ADF, and close the ADF.
Confirm that the ADF is closed properly.
To check whether or not it is closed completely, open the ADF and then close it again.
For more details about opening and closing the ADF, refer to Opening/Closing the ADF (page 49).

Imprinter Cover Open (When the Imprinter Is Installed) [fi-8600]

If you open the print section (imprinter cover) while scanning, the following error information is displayed.
If you open the print section (imprinter cover) while the scanner is in standby, only the error message appears on the LCD without the error code.

LCD		Error Recovery Guide Window
Error Code	Error Message	
U5:4A Error	Imprinter Cover Open	Cover open

Remove the document from the ADF, and close the print section (imprinter cover).
Confirm that the print section (imprinter cover) is closed properly.
To check whether or not it is closed completely, open the print section (imprinter cover) and then close it again.
For details about opening and closing the print section (imprinter cover), refer to the fi-760PRB Imprinter Operator's Guide.

Print Cartridge Not Installed (When the Imprinter Is Installed) [fi-8600]

If the print cartridge is not installed in the imprinter, the following error information is displayed.

LCD		Error Recovery Guide Window
Error Code	Error Message	
U6:B4 Error	Print cartridge not installed Check if the Print Cartridge is mounted correctly.	Print Cartridge Not Installed

Refer to the fi-760PRB Imprinter Operator Guide to install the print cartridge.

Imprinting Area Error (When the Imprinter Is Installed) [fi-8600]

If an error occurs with the print start position in the imprinter, the following error information is displayed.

LCD		Error Recovery Guide Window
Error Code	Error Message	
U7:B9 Error	Imprinting area error	Imprinter paper detection failure or imprinting area error

Adjust the start position and character string for printing so that the print area is inside the document.
For details, refer to the fi-760PRB Imprinter Operator's Guide.

Being Used by Others

The scanner is already being used.

- Make sure that another application is not using the scanner.
- Make sure that the connection method of the scanner is correct.
- Make sure that no operations are being performed on the operator panel.
- Make sure that resident applications on the computer are not using the scanner.
  For example, the following applications may be occupying the scanner.
  - PaperStream Capture
  - PaperStream ClickScan
  - Button Event Manager ([Watch Button Event] is enabled)

No Paper

No document has been loaded.
Load a document in the ADF paper chute (feeder).

Stop

Pressing the [Stop/Clear] button in the middle of a scan caused the scan to stop.
Before resuming a scan, if documents remain in the scanner, refer to When a Paper Jam Occurs (page 199) to remove the documents. Then press the [Stop/Clear] button to clear the display.

Pause

Scanning has been paused by the user.
When you press the [Scan/Enter] button in the middle of a scan, scanning stops temporarily.
To resume scanning, press the [Scan/Enter] button.

Troubleshooting

This section describes examples of troubles that you may encounter when using the scanner and also describes the solutions to them.
Before you request for a repair, take measures by looking through the examples of the troubles and solutions.
If the problem still persists, check each item in Before You Contact the Scanner Service Provider (page 256) first, then contact the distributor/dealer where you purchased this product.

- **Power of the scanner**
  - The Scanner Cannot Be Powered ON (page 222)
  - One or Both of the LCD and the [Power] Button Turn Off (page 223)
- **Connection of the scanner**

  USB
  - Cannot Connect the Scanner and a Computer via the USB Cable (page 224)

  Wired LAN
  - Cannot Connect the Scanner and a Computer via a Wired LAN (page 225)
- **Scanning operations**
  - Scanning Does Not Start (page 229)
  - Scanning Takes a Long Time (page 231)
  - An Error (Error Code "U0:10", "U4:40" or "U5:4A") is Already Displayed in the LCD After Power-on (page 232)
  - Overlapped Documents Are Frequently Fed into the Scanner (page 233)
  - Situation in Which the Document Is not Fed into the ADF Occurs Frequently (page 236)
  - Paper Damage Prevention Errors Occur Frequently (page 238)
  - Paper Jams/Pick Errors Occur Frequently (page 240)
- **Scanning results**
  - The Scanned Image of a Picture or Photo is Rough/Image Noise Appears (page 242)
  - Quality of Scanned Text or Lines Is Unsatisfactory (page 243)
  - Images Are Distorted or Not Clear (page 245)
  - Vertical Streaks Appear on the Images (page 247)
  - Images Turn Out Elongated (page 249)
  - A Shadow Appears at the Top or the Bottom of the Image (page 250)
  - There Are Black Traces on the Document (page 251)

- **Carrier Sheet**
  - The Carrier Sheet Is Not Fed Smoothly/Paper Jams Occur (page 252)
  - Part of the Image Appears Missing in the Case Where the Carrier Sheet Is Used (page 254)
- **Password**
  - Forgotten Admin Password (page 255)
  - An Error Occurs When Entering the Default Administrator Password (page 255)

The Scanner Cannot Be Powered ON

Check the following points

- Is the power cable connected properly? (page 222)
- Did you press the [Power] button on the scanner? (page 222)

If the problem still persists, check each item in Before You Contact the Scanner Service Provider (page 256) first, then contact the distributor/dealer where you purchased this product.

- **Is the power cable connected properly?**

Solution

Connect the power cable properly.

➡ Starting Scanner Setup (page 30)

- **Did you press the [Power] button on the scanner?**

Solution

Press the [Power] button on the scanner.

➡ How to Turn the Power ON (page 44)

One or Both of the LCD and the [Power] Button Turn Off

Check the following points

- Has the scanner been left out of operation for a long time after being powered on? (page 223)

If the problem still persists, check each item in Before You Contact the Scanner Service Provider (page 256) first, then contact the distributor/dealer where you purchased this product.

- **Has the scanner been left out of operation for a long time after being powered on?**

Solution

The scanner has entered power saving mode or has been automatically turned off.

- If the scanner has entered power saving mode
  The LCD turns off and the [Power] button flashes in green.
  Resume from power saving mode by one of the following methods:
  - Load a document in the ADF paper chute (feeder).
  - Press any button on the scanner (except the [Power] button).
  - Scan a document with the image scanning application.

  ➡ Entering and Resuming from Power Saving Mode (page 47)
- If the scanner has been automatically turned off
  Both the LCD and the [Power] button turn off.
  Turn on the scanner.

  ➡ How to Turn the Power ON (page 44)

Cannot Connect the Scanner and a Computer via the USB Cable

Check the following points

- Is the USB cable connected properly? (page 224)
- Is the connector on the USB cable broken or damaged? (page 224)
- Is the scanner driver the latest version? (page 224)
- Did you select [Automatic] for the USB setting for the scanner? (page 224)

If the problem still persists, check each item in Before You Contact the Scanner Service Provider (page 256) first, then contact the distributor/dealer where you purchased this product.

- **Is the USB cable connected properly?**

  Solution

  Use the USB cable that is supplied.
  Check whether the scanner and computer are connected via the USB cable.

  ➡ Starting Scanner Setup (page 30)

- **Is the connector on the USB cable broken or damaged?**

  Solution

  Use a new USB cable and connect it properly.

- **Is the scanner driver the latest version?**

  Solution

  Update the scanner driver to the latest version.

- **Did you select [Automatic] for the USB setting for the scanner?**

  Solution

  If you select [Automatic] for the USB setting for the scanner, the connection between the scanner and a computer may not be able to be established.
  Change the USB setting for the scanner to [USB 2.0] using one of the following methods:

  - [27:USB] on the [Settings Menu] screen of the operator panel

    ➡ How to Use the Settings Menu (page 109)

  - Software Operation Panel

    ➡ Specifying the USB Operation [USB] (page 319)

Cannot Connect the Scanner and a Computer via a Wired LAN

Check the following points

- Is the scanner connected to a network device (such as a switch, a hub, or a router) via a LAN cable? (page 225)
- Is the network device (such as a switch, a hub, or a router) turned on? (page 225)
- Is the firmware version for the network device the latest? (page 226)
- Is the computer connected to a network device (such as a switch, a hub, or a router)? (page 226)
- Did you configure the settings related to communication conditions on a network device (such as a switch, a hub, or a router)? (page 226)
- Are there any security limitations in the network? (page 226)
- Is the network stable? (page 226)
- Are there any security restrictions on the computer? (page 227)
- Is the computer connected to a wired LAN? (page 227)
- Is the scanner connected to another computer? (page 227)
- Is the IP address of the scanner correct? (page 227)
- Is the IP address of the scanner used for other communication devices? (page 227)
- Is the scanner driver the latest version? (page 228)

If the problem still persists, check each item in Before You Contact the Scanner Service Provider (page 256) first, then contact the distributor/dealer where you purchased this product.

- **Is the scanner connected to a network device (such as a switch, a hub, or a router) via a LAN cable?**

Solution

Connect the scanner to a network device (such as a switch, a hub, or a router) via a LAN cable.
Also, connect the LAN cable properly.
When the LAN cable is connected properly, take the following measures:

- Replace the LAN cable.
- Change the port on the network device, which the LAN cable is connected to.
- Change the speed and transmission method for the network device to "Automatic".
  If the settings for the network device can only be set to "Manual", select "half-duplex" for the transmission method.

- **Is the network device (such as a switch, a hub, or a router) turned on?**

Solution

Turn on the network device (such as a switch, a hub, or a router).
Also, check that there is no error or malfunction on the network device.
For errors that occur on the network device, refer to the manual of your network device.

- **Is the firmware version for the network device the latest?**

  Solution

  If the firmware version for the network device is not the latest, unexpected operations may occur.
  Contact the network administrator to check the firmware version, and consider updating it to the latest version.
  For details about how to update the firmware for the network device, refer to the manual of your network device.

- **Is the computer connected to a network device (such as a switch, a hub, or a router)?**

  Solution

  Connect the computer to a network device (such as a switch, a hub, or a router).
  For details, refer to the manual of your computer.

- **Did you configure the settings related to communication conditions on a network device (such as a switch, a hub, or a router)?**

  Solution

  When the following are set on the network device (such as a switch, a hub, or a router), take measures accordingly.

  - Protocol filter function is enabled.
    Allow the protocol which is to be used for communication.
  - MAC address filtering is enabled.
    Configure the network device (such as a switch, a hub, or a router) with the MAC address of the scanner.

  For the settings on the network device, refer to the manual of your network device.

- **Are there any security limitations in the network?**

  Solution

  The access limitations for users may be configured in the network.
  For details, contact the network administrator.

- **Is the network stable?**

  Solution

  Connect to the network after it becomes stable.
  A network can be unstable by the following events:

  - A network monitoring program is running.
  - A file is transferring.

If the network is unstable, restart the network devices. However, before restarting them, make sure that communications with other devices are not affected if the network devices are restarted. The network devices may become unstable.

- **Are there any security restrictions on the computer?**

  Solution

  In the Windows Firewall settings or in the firewall settings of your security software, unblock the communication of the port numbers which are used by the following software.

  • Scanner Selection Tool
  Port number: 52217

  For details about unblocking the communication, refer to the manual or help of your computer or security software.

- **Is the computer connected to a wired LAN?**

  Solution

  Check the connection status of the computer.

  ➡ How to Check the Network Connection for the Scanner (page 349)

- **Is the scanner connected to another computer?**

  Solution

  The scanner can be connected to only one computer at a time. Wait until the other computer is disconnected from the scanner, and then connect the computer to be used again.

- **Is the IP address of the scanner correct?**

  Solution

  Check the IP address of the scanner.
  You can use IP Address Setting Tool to check the IP address.
  For details, refer to the Network Setup Tool Help.
  For details about how to start up IP Address Setting Tool, refer to Starting Up IP Address Setting Tool (page 354).
  When specifying an IP address manually, specify the correct IP address.
  When setting the IP address automatically, check whether the DHCP server functions normally. Even when the DHCP server functions normally, an IP address may not be assigned correctly depending on the settings for the DHCP server. Check the operation status and the settings for the DHCP server.

- **Is the IP address of the scanner used for other communication devices?**

  Solution

  If there are multiple communication devices using the same IP address on the same network, communication may fail. Avoid duplicates in IP addresses.

- **Is the scanner driver the latest version?**

  Solution

  Update the scanner driver to the latest version.

Scanning Does Not Start

Check the following points

- Did you unlock the transport lock? [fi-8700/fi-8700S] (page 229)
- Did you configure the settings for the button to be used for starting a scan? (page 229)
- Is the document loaded in the ADF paper chute (feeder) correctly? (page 229)
- Is the ADF closed properly? (page 229)
- Are the scanner and the computer properly connected? (page 229)
- When using a wired LAN connection, have WinHTTP proxy settings been configured on the computer? (page 230)

If the problem still persists, check each item in Before You Contact the Scanner Service Provider (page 256) first, then contact the distributor/dealer where you purchased this product.

- **Did you unlock the transport lock? [fi-8700/fi-8700S]**

Solution

Turn off the scanner, and unlock the transport lock.
For details about how to turn off the scanner, refer to How to Turn the Power OFF (page 46).
For details about unlocking the transport lock, refer to Transport Lock Error [fi-8700/fi-8700S] (page 217).

- **Did you configure the settings for the button to be used for starting a scan?**

Solution

Configure the settings for the button to be used for starting a scan.

➡ Pressing a Button on the Scanner in order to Start an Image Scanning Application and Perform a Scan (page 64)

- **Is the document loaded in the ADF paper chute (feeder) correctly?**

Solution

Reload the document in the ADF paper chute (feeder).

- **Is the ADF closed properly?**

Solution

Close the ADF firmly.
If the document is caught in the ADF, remove the document and close the ADF.

- **Are the scanner and the computer properly connected?**

Solution

- For a wired LAN

Connect the scanner and the computer via a wired LAN. When you cannot connect them via a wired LAN, refer to Cannot Connect the Scanner and a Computer via a Wired LAN (page 225).

- For USB
  Connect the USB cable properly.

- **When using a wired LAN connection, have WinHTTP proxy settings been configured on the computer?**

  Even if you have selected a scanner using Scanner Selection Tool, you may not be able to connect to the scanner or the connection may be slow, depending on your computer's proxy server settings.

  Solution

  Change the WinHTTP proxy settings by the following procedure:

  1. Open the command prompt on the computer as an administrator.
  2. Run the following command to check the proxy server name and port number.

     ```
     netsh winhttp show proxy
     ```

     The output is displayed as follows.
     "*ProxyServerName*:*PortNumber*"
  3. Execute one of the following commands.
     - When a proxy server is set
       Change the settings so as to not use a proxy server.

       ```
       netsh winhttp set proxy proxy-server="XXXXXX:YYYY" bypass-list=ZZZ.ZZZ.ZZZ.ZZZ
       ```

       XXXXXX: Proxy server name
       YYYY: Port number used
       ZZZ.ZZZ.ZZZ.ZZZ: Scanner IP address (*1) (*2)
     - When a proxy server is not set
       Resetting the settings may enable the computer to access the scanner.

       ```
       netsh winhttp reset proxy
       ```

  ***1:**To check the scanner IP address, select [Scanner Information] → [Scanner Information] in fi Series Network Settings.

  ***2:**The IPv4 address format is shown below as an example.
  The following format is used for an IPv6 address:
  ZZZZ:ZZZZ:ZZZZ:ZZZZ:ZZZZ:ZZZZ:ZZZZ:ZZZZ

Scanning Takes a Long Time

Check the following points

- If a USB connection is used, is the USB cable connected to the USB 1.1 port on the computer? (page 231)
- Did you start a scan while the computer was unstable (for example, immediately after computer start-up or signing in)? (page 231)
- Are the rollers clean? (page 231)
- Does the computer meet the requirements of the measurement environment? (page 231)
- Are you scanning the document in Manual Single Mode? (page 231)

If the problem still persists, check each item in Before You Contact the Scanner Service Provider (page 256) first, then contact the distributor/dealer where you purchased this product.

- **If a USB connection is used, is the USB cable connected to the USB 1.1 port on the computer?**

  Solution

  If a USB connection is used, connect the USB cable to the USB 3.2 Gen 1x1 (USB 3.0)/USB 2.0 port.

- **Did you start a scan while the computer was unstable (for example, immediately after computer start-up or signing in)?**

  Solution

  When you start or sign in to the computer, wait a while before starting a scan.

- **Are the rollers clean?**

  Solution

  Clean the rollers.

  ➡ Daily Care (page 168)

- **Does the computer meet the requirements of the measurement environment?**

  Solution

  If the computer does not meet the requirements for CPU or memory in the measurement environment (described in Basic Specification (page 341)), use another computer that meets the requirements.

- **Are you scanning the document in Manual Single Mode?**

  The scanning speed slows down when scanning documents in Manual Single Mode.

  ➡ Scanning Documents Folded in Half (page 140)

  ➡ Scanning Documents such as Envelopes or Multi-Layered Transfer Paper (page 144)

An Error (Error Code "U0:10", "U4:40" or "U5:4A") is Already Displayed in the LCD After Power-on

Check the following points

- Did you unlock the transport lock? [fi-8700/fi-8700S] (page 232)
- Is the ADF closed firmly? (page 232)
- Is the print section (imprinter cover) closed firmly? (when the imprinter is installed) [fi-8600] (page 232)

If the problem still persists, check each item in Before You Contact the Scanner Service Provider (page 256) first, then contact the distributor/dealer where you purchased this product.

- **Did you unlock the transport lock? [fi-8700/fi-8700S]**

  Solution

  Turn off the scanner, and unlock the transport lock.
  For details about how to turn off the scanner, refer to How to Turn the Power OFF (page 46).
  For details about unlocking the transport lock, refer to Transport Lock Error [fi-8700/fi-8700S] (page 217).

- **Is the ADF closed firmly?**

  Solution

  Close the ADF firmly.

  ➡ How to Close the ADF (page 50)

- **Is the print section (imprinter cover) closed firmly? (when the imprinter is installed) [fi-8600]**

  Solution

  Close the print section (imprinter cover) firmly.
  For details, refer to the fi-760PRB Imprinter Operator's Guide.

Overlapped Documents Are Frequently Fed into the Scanner

Check the following points

- Do the documents meet the paper requirements? (page 233)
- Are you using the Carrier Sheet? (page 233)
- If the setting to detect overlapped documents is enabled, do the documents fulfill the conditions to detect overlapped documents accurately? (page 233)
- Did you scan a thick document such as a plastic card? (page 234)
- Did you fan the documents before loading them? (page 234)
- Have the documents just been printed out from a copy machine or a laser printer? (page 234)
- Is the height of the document stack less than 30 mm (for A4 size or smaller documents), or less than 10 mm (for documents larger than A4)? (page 234)
- Are the brake rollers and pick rollers installed correctly? (page 234)
- Are the brake rollers and pick rollers clean? (page 234)
- Are the brake rollers and pick rollers worn out? (page 235)
- Are you using the scanner at an altitude of 2,000 m or higher? (page 235)

If the problem still persists, check each item in Before You Contact the Scanner Service Provider (page 256) first, then contact the distributor/dealer where you purchased this product.

- **Do the documents meet the paper requirements?**

  Solution

  Use documents that meet the requirements.

  ➡ Documents for Scanning (page 83)

- **Are you using the Carrier Sheet?**

  Solution

  Enable the setting for using the Carrier Sheet in the scanner driver.
  For details about scanning with the Carrier Sheet, refer to the following.

  - Scanning Documents That Can Be Damaged Quite Easily without Damaging Them (page 146)
  - Scanning Photographs and Clippings without Damaging Them (page 148)

- **If the setting to detect overlapped documents is enabled, do the documents fulfill the conditions to detect overlapped documents accurately?**

  Solution

  Some documents may be detected as overlapped documents accidentally.

  ➡ Conditions Required to Accurately Detect Overlapped Documents (Multifeed) (page 91)

If necessary, specify the area to detect overlapped documents.

➡ Specifying the Area to Detect Overlapped Documents [Document check area specification for Multifeed Detection] (page 308)

- **Did you scan a thick document such as a plastic card?**

  Solution

  Perform one of the following for a scan:

  • Configure not to detect certain overlap patterns.

  • Disable the setting to detect overlapped documents by the ultrasonic sensor.

  • Scan with Manual Single Mode.

- **Did you fan the documents before loading them?**

  Solution

  Fan the documents.

  ➡ Preparing Documents to Load Them in the ADF Paper Chute (Feeder) (page 73)

- **Have the documents just been printed out from a copy machine or a laser printer?**

  Solution

  Fan the documents a few times to remove static electricity.

  ➡ Preparing Documents to Load Them in the ADF Paper Chute (Feeder) (page 73)

- **Is the height of the document stack less than 30 mm (for A4 size or smaller documents), or less than 10 mm (for documents larger than A4)?**

  Solution

  Documents can be loaded up to a height of 30 mm (for A4 size or smaller documents), or up to 10 mm (for documents larger than A4). Reduce the number of sheets so that the height of the document stack is less than 30 mm (for A4-size or smaller documents), or less than 10 mm (for documents larger than A4).

- **Are the brake rollers and pick rollers installed correctly?**

  Solution

  Install the brake rollers and pick rollers correctly.

  ➡ Replacing the Brake Roller (page 187)

  ➡ Replacing the Pick Roller (page 191)

- **Are the brake rollers and pick rollers clean?**

  Solution

  Clean the brake rollers and pick rollers.

➡ Daily Care (page 168)

- **Are the brake rollers and pick rollers worn out?**

  Solution

  Check the counters for the brake roller and pick roller with one of the following methods.

  • [5:Consumable counters] on the [Settings Menu] screen of the operator panel

  ➡ How to Use the Settings Menu (page 109)

  • Software Operation Panel

  ➡ Checking the Sheet Counters (page 276)

  If necessary, replace the brake rollers and pick rollers.

  ➡ Replacing the Brake Roller (page 187)

  ➡ Replacing the Pick Roller (page 191)

- **Are you using the scanner at an altitude of 2,000 m or higher?**

  Solution

  If the scanner is being used at an altitude of 2,000 m or higher, enable [High Altitude Mode] in Software Operation Panel.

  > **TIP**
  > If the scanner is being used on level ground lower than 2,000 m with [High Altitude Mode] enabled, overlapped documents may not be detected.
  > If the scanner is being used on level ground lower than 2,000 m, disable [High Altitude Mode].

Situation in Which the Document Is not Fed into the ADF Occurs Frequently

Check the following points

- Do the documents meet the paper requirements? (page 236)
- Did you fan the documents before loading them? (page 236)
- Are the brake rollers and pick rollers installed correctly? (page 236)
- Are the brake rollers and pick rollers clean? (page 236)
- Are the brake rollers and pick rollers worn out? (page 237)
- Did you scan a thick document such as a plastic card? (page 237)
- Are the documents to be scanned thick or curled? (page 237)

If the problem still persists, check each item in Before You Contact the Scanner Service Provider (page 256) first, then contact the distributor/dealer where you purchased this product.

- **Do the documents meet the paper requirements?**

Solution

Use documents that meet the requirements.

➡ Documents for Scanning (page 83)

- **Did you fan the documents before loading them?**

Solution

Fan the documents.

➡ Preparing Documents to Load Them in the ADF Paper Chute (Feeder) (page 73)

- **Are the brake rollers and pick rollers installed correctly?**

Solution

Install the brake rollers and pick rollers correctly.

➡ Replacing the Brake Roller (page 187)

➡ Replacing the Pick Roller (page 191)

- **Are the brake rollers and pick rollers clean?**

Solution

Clean the brake rollers and pick rollers.

➡ Daily Care (page 168)

- **Are the brake rollers and pick rollers worn out?**

  Solution

  Check the counters for the brake roller and pick roller with one of the following methods.

  - [5:Consumable counters] on the [Settings Menu] screen of the operator panel

    ➡ How to Use the Settings Menu (page 109)

  - Software Operation Panel

    ➡ Checking the Sheet Counters (page 276)

  If necessary, replace the brake rollers and pick rollers.

  ➡ Replacing the Brake Roller (page 187)

  ➡ Replacing the Pick Roller (page 191)

- **Did you scan a thick document such as a plastic card?**

  Solution

  Perform one of the following for a scan:

  - Configure not to detect certain overlap patterns.
  - Disable the setting to detect overlapped documents by the ultrasonic sensor.
  - Scan with Manual Single Mode.

- **Are the documents to be scanned thick or curled?**

  Solution

  Use either of the following methods to set the pick pressure to high.

  - [16:Pick pressure] on the [Settings Menu] screen of the operator panel

    ➡ How to Use the Settings Menu (page 109)

  - Software Operation Panel

    ➡ Adjusting the Paper Picking Pressure [Pick Pressure] (page 298)

Paper Damage Prevention Errors Occur Frequently

Check the following points

- When you load documents, do you align the side guides with the width of the documents? (page 238)
- Do the documents meet the paper requirements? (page 238)
- Is there any foreign matter in the ADF? (page 238)
- Are the brake rollers and pick rollers installed correctly? (page 238)
- Are the brake rollers and pick rollers clean? (page 239)
- Are the brake rollers and pick rollers worn out? (page 239)
- Is the sensitivity level for the paper protection function set to high? (page 239)

If the problem still persists, check each item in Before You Contact the Scanner Service Provider (page 256) first, then contact the distributor/dealer where you purchased this product.

- **When you load documents, do you align the side guides with the width of the documents?**

  Solution

  Make sure that there is no space between the side guides and the edges of the documents when loading documents.

- **Do the documents meet the paper requirements?**

  Solution

  Use documents that meet the requirements.

  ➡ Documents for Scanning (page 83)

- **Is there any foreign matter in the ADF?**

  Solution

  Clean the ADF.
  Remove any foreign matter from the ADF.

  ➡ Daily Care (page 168)

- **Are the brake rollers and pick rollers installed correctly?**

  Solution

  Install the brake rollers and pick rollers correctly.

  ➡ Replacing the Brake Roller (page 187)

  ➡ Replacing the Pick Roller (page 191)

- **Are the brake rollers and pick rollers clean?**

  Solution

  Clean the brake rollers and pick rollers.

  ➡ Daily Care (page 168)

- **Are the brake rollers and pick rollers worn out?**

  Solution

  Check the counters for the brake roller and pick roller with one of the following methods.

  • [5:Consumable counters] on the [Settings Menu] screen of the operator panel

  ➡ How to Use the Settings Menu (page 109)

  • Software Operation Panel

  ➡ Checking the Sheet Counters (page 276)

  If necessary, replace the brake rollers and pick rollers.

  ➡ Replacing the Brake Roller (page 187)

  ➡ Replacing the Pick Roller (page 191)

- **Is the sensitivity level for the paper protection function set to high?**

  Solution

  Use one of the following methods to lower the paper protection sensitivity level.

  • [19:Paper Protection] on the [Settings Menu] screen of the operator panel

  ➡ How to Use the Settings Menu (page 109)

  • Software Operation Panel

  ➡ Specifying the Sensitivity Level for Paper Protection [Paper Protection Sensitivity] (page 295)

Paper Jams/Pick Errors Occur Frequently

Check the following points

- Do the documents meet the paper requirements? (page 240)
- Is there any foreign matter in the ADF? (page 240)
- Is there a document remaining in the ADF? (page 240)
- Are the brake rollers and pick rollers installed correctly? (page 240)
- Are the brake rollers and pick rollers clean? (page 240)
- Are the brake rollers and pick rollers worn out? (page 241)

If the problem still persists, check each item in Before You Contact the Scanner Service Provider (page 256) first, then contact the distributor/dealer where you purchased this product.

- **Do the documents meet the paper requirements?**

Solution

Use documents that meet the requirements.

➡ Documents for Scanning (page 83)

- **Is there any foreign matter in the ADF?**

Solution

Clean the ADF.
Remove any foreign matter from the ADF.

➡ Daily Care (page 168)

- **Is there a document remaining in the ADF?**

Solution

Remove the document from the ADF.

➡ When a Paper Jam Occurs (page 199)

- **Are the brake rollers and pick rollers installed correctly?**

Solution

Install the brake rollers and pick rollers correctly.

➡ Replacing the Brake Roller (page 187)

➡ Replacing the Pick Roller (page 191)

- **Are the brake rollers and pick rollers clean?**

Solution

Clean the brake rollers and pick rollers.

➡ Daily Care (page 168)

- **Are the brake rollers and pick rollers worn out?**

  Solution

  Check the counters for the brake roller and pick roller with one of the following methods.

  ● [5:Consumable counters] on the [Settings Menu] screen of the operator panel

  ➡ How to Use the Settings Menu (page 109)

  ● Software Operation Panel

  ➡ Checking the Sheet Counters (page 276)

  If necessary, replace the brake rollers and pick rollers.

  ➡ Replacing the Brake Roller (page 187)

  ➡ Replacing the Pick Roller (page 191)

The Scanned Image of a Picture or Photo is Rough/Image Noise Appears

Check the following points

- Did you configure the settings in the scanner driver to scan in black & white mode? (page 242)
- Did you specify a lower resolution for scanning in the scanner driver? (page 242)
- Are the glass and rollers inside the ADF clean? (page 242)

Also, refer to "Image Output" in the help for the scanner driver and take measures accordingly.
If the problem still persists, check each item in Before You Contact the Scanner Service Provider (page 256) first, then contact the distributor/dealer where you purchased this product.

- **Did you configure the settings in the scanner driver to scan in black & white mode?**

  Solution

  The scanned image may differ from the original image significantly if you simply "binarize" (output in black & white) a picture or a photo.
  Set color or grayscale mode in the scanner driver.

- **Did you specify a lower resolution for scanning in the scanner driver?**

  Solution

  If you scan a halftone printed document, patterned noise (moire) may appear on the image.
  Specify a higher resolution in the scanner driver.

- **Are the glass and rollers inside the ADF clean?**

  Solution

  Clean the dirty parts.

  ➔ Daily Care (page 168)

Quality of Scanned Text or Lines Is Unsatisfactory

Check the following points

- Are the document pad and document bed clean when you scan documents with the flatbed? [fi-8700/fi-8700S] (page 243)
- Are the glass and rollers inside the ADF clean? (page 243)
- Is the resolution appropriate? (page 243)
- Did you configure the settings in the scanner driver to scan in grayscale or color mode? (page 243)
- Is there any foreign matter (such as dust or paper dust) on the document? (page 244)

Also, refer to "Image Output" in the help for the scanner driver and take measures accordingly.
If the problem still persists, check each item in Before You Contact the Scanner Service Provider (page 256) first, then contact the distributor/dealer where you purchased this product.

- **Are the document pad and document bed clean when you scan documents with the flatbed? [fi-8700/fi-8700S]**

  Solution

  Clean the dirty parts.

  ➡ Daily Care (page 168)

- **Are the glass and rollers inside the ADF clean?**

  Solution

  Clean the dirty parts.

  ➡ Daily Care (page 168)

- **Is the resolution appropriate?**

  Solution

  Specify a higher resolution in the scanner driver.

- **Did you configure the settings in the scanner driver to scan in grayscale or color mode?**

  Solution

  Set black & white mode in the scanner driver.
  When you scan in grayscale or in color mode, the scanned image may not become sharp and clear.

- **Is there any foreign matter (such as dust or paper dust) on the document?**

  Solution

  Remove any foreign matter off the document.
  Foreign matter may get on the glass that is inside the ADF or on the document bed of the flatbed [fi-8700/fi-8700S] causing the image to appear dirty.

Images Are Distorted or Not Clear

Check the following points

- Are the document pad and document bed clean when you scan documents with the flatbed? [fi-8700/fi-8700S] (page 245)
- Are the glass and rollers inside the ADF clean? (page 245)
- Is the ADF being pushed down during scanning? Or, is there a heavy object on top of the ADF? (page 245)
- Is a scan performed on a place that is unstable or vibrates? (page 245)
- Is the scanner placed on a flat, level surface? Are the rubber pads attached on the bottom of the scanner? (page 245)
- Are there any wrinkles or curls on the document? (page 246)

If the problem still persists, check each item in Before You Contact the Scanner Service Provider (page 256) first, then contact the distributor/dealer where you purchased this product.

- **Are the document pad and document bed clean when you scan documents with the flatbed? [fi-8700/fi-8700S]**

  Solution

  Clean the dirty parts.

  ➡ Daily Care (page 168)

- **Are the glass and rollers inside the ADF clean?**

  Solution

  Clean the dirty parts.

  ➡ Daily Care (page 168)

- **Is the ADF being pushed down during scanning? Or, is there a heavy object on top of the ADF?**

  Solution

  Do not push down the top of the ADF, or place any heavy objects on the ADF during scanning.

- **Is a scan performed on a place that is unstable or vibrates?**

  Solution

  Perform a scan on a place that is stable and does not vibrate.

- **Is the scanner placed on a flat, level surface? Are the rubber pads attached on the bottom of the scanner?**

  Solution

  Place the scanner on a flat and level surface.

Or, attach the rubber pads on the bottom of the scanner.

- **Are there any wrinkles or curls on the document?**

  Solution

  Smooth out the wrinkles or curls on the document.

Vertical Streaks Appear on the Images

Check the following points

- Are the document pad and document bed clean when you scan documents with the flatbed? [fi-8700/fi-8700S] (page 247)
- Are the glass and rollers inside the ADF clean? (page 247)
- Do vertical streaks disappear when a lower resolution is specified? (page 247)
- Is there any foreign matter (such as dust or paper dust) on the document? (page 247)
- Is the vertical streaks reduction function enabled in the scanner driver? (page 247)

If the problem still persists, check each item in Before You Contact the Scanner Service Provider (page 256) first, then contact the distributor/dealer where you purchased this product.

- **Are the document pad and document bed clean when you scan documents with the flatbed? [fi-8700/fi-8700S]**

  Solution

  Clean the dirty parts.

  ➡ Daily Care (page 168)

- **Are the glass and rollers inside the ADF clean?**

  Solution

  Clean the dirty parts.

  ➡ Daily Care (page 168)

- **Do vertical streaks disappear when a lower resolution is specified?**

  Solution

  Specify a lower resolution to scan documents.

- **Is there any foreign matter (such as dust or paper dust) on the document?**

  Solution

  Remove any foreign matter off the document.
  Foreign matter may get on the glass that is inside the ADF or on the document bed of the flatbed [fi-8700/fi-8700S] causing the image to appear dirty.

- **Is the vertical streaks reduction function enabled in the scanner driver?**

  Solution

  Enable the vertical streaks reduction function in the scanner driver.

However, when the vertical streaks reduction function is enabled, depending on the thickness and location of the streaks, they may not be sufficiently reduced, and color bleeding may occur on text and on ruled lines.

Images Turn Out Elongated

Check the following points

- Are the rollers clean? (page 249)
- Do the documents meet the paper requirements? (page 249)
- Are the brake rollers and pick rollers worn out? (page 249)
- Have you adjusted the magnification level? (page 249)

If the problem still persists, check each item in Before You Contact the Scanner Service Provider (page 256) first, then contact the distributor/dealer where you purchased this product.

- **Are the rollers clean?**

  Solution

  Clean the rollers.

  ➡ Daily Care (page 168)

- **Do the documents meet the paper requirements?**

  Solution

  Use documents that meet the requirements.

  ➡ Documents for Scanning (page 83)

- **Are the brake rollers and pick rollers worn out?**

  Solution

  Check the counters for the brake roller and pick roller with one of the following methods.

  - [5:Consumable counters] on the [Settings Menu] screen of the operator panel

    ➡ How to Use the Settings Menu (page 109)

  - Software Operation Panel

    ➡ Checking the Sheet Counters (page 276)

  If necessary, replace the brake rollers and pick rollers.

  ➡ Replacing the Brake Roller (page 187)

  ➡ Replacing the Pick Roller (page 191)

- **Have you adjusted the magnification level?**

  Solution

  Adjust the magnification level for feed direction in Software Operation Panel.

  ➡ Adjusting the Starting Position for Scanning [Offset Setting/Vertical magnification Adjustment] (page 283)

A Shadow Appears at the Top or the Bottom of the Image

Check the following points

- Have you adjusted the offset (position to start the scan)? (page 250)
- Did you use the page edge filler function to fill in the shadow around the edge? (page 250)

If the problem still persists, check each item in Before You Contact the Scanner Service Provider (page 256) first, then contact the distributor/dealer where you purchased this product.

- **Have you adjusted the offset (position to start the scan)?**

Solution

Adjust the offset in the sub-scanning direction in Software Operation Panel.

➡ Adjusting the Starting Position for Scanning [Offset Setting/Vertical magnification Adjustment] (page 283)

- **Did you use the page edge filler function to fill in the shadow around the edge?**

Solution

Use one of the following methods to fill in the shadow around the edge.

- Software Operation Panel

➡ Removing Shadows/Streaks that Appear around Edges of Images [Page Edge Filler (ADF)/ Page Edge Filler (FB) [fi-8700/fi-8700S]] (page 285)

- Scanner driver

The page edge filler is applied to images whose edges have already been filled according to the settings in Software Operation Panel.
For details, refer to the help for the scanner driver.

There Are Black Traces on the Document

Check the following points

- Are you scanning documents written in lead pencil or carbon paper? (page 251)
- Are the glass and rollers inside the ADF clean? (page 251)

If the problem still persists, check each item in Before You Contact the Scanner Service Provider (page 256) first, then contact the distributor/dealer where you purchased this product.

- **Are you scanning documents written in lead pencil or carbon paper?**

Solution

When you scan documents written in lead pencil, make sure you clean the rollers frequently.

➡ Daily Care (page 168)

- **Are the glass and rollers inside the ADF clean?**

Solution

Clean the dirty parts.

➡ Daily Care (page 168)

The Carrier Sheet Is Not Fed Smoothly/Paper Jams Occur

Check the following points

- Did you scan just the Carrier Sheet continuously? (page 252)
- Is the Carrier Sheet clean? (page 252)
- Did you start the scan after loading the Carrier Sheet in the ADF paper chute (feeder)? (page 252)
- Are the glass and rollers inside the ADF clean? (page 253)
- Are the brake rollers and pick rollers worn out? (page 253)
- Is there any foreign matter in the ADF? (page 253)
- Did you place a thick document inside the Carrier Sheet? (page 253)

If the problem still persists, check each item in Before You Contact the Scanner Service Provider (page 256) first, then contact the distributor/dealer where you purchased this product.

- **Did you scan just the Carrier Sheet continuously?**

Solution

Feed about 50 sheets of PPC paper (recycled paper) before scanning with the Carrier Sheet. The PPC paper can either be blank or printed.

- **Is the Carrier Sheet clean?**

Solution

Perform one of the following.

- Clean the Carrier Sheet.

  ➡ Cleaning the Carrier Sheet (page 184)

- Replace the Carrier Sheet.
  For information on purchasing the Carrier Sheets, contact the distributor/dealer where you purchased this product.

- **Did you start the scan after loading the Carrier Sheet in the ADF paper chute (feeder)?**

Solution

Start the scan after loading the Carrier Sheet in the ADF paper chute (feeder).

➡ Scanning Documents That Can Be Damaged Quite Easily without Damaging Them (page 146)

➡ Scanning Photographs and Clippings without Damaging Them (page 148)

- **Are the glass and rollers inside the ADF clean?**

  Solution

  Clean the dirty parts.

  ➡ Daily Care (page 168)

- **Are the brake rollers and pick rollers worn out?**

  Solution

  Check the counters for the brake roller and pick roller with one of the following methods.

  • [5:Consumable counters] on the [Settings Menu] screen of the operator panel

  ➡ How to Use the Settings Menu (page 109)

  • Software Operation Panel

  ➡ Checking the Sheet Counters (page 276)

  If necessary, replace the brake rollers and pick rollers.

  ➡ Replacing the Brake Roller (page 187)

  ➡ Replacing the Pick Roller (page 191)

- **Is there any foreign matter in the ADF?**

  Solution

  Clean the ADF.
  Remove any foreign matter from the ADF.

  ➡ Daily Care (page 168)

- **Did you place a thick document inside the Carrier Sheet?**

  Solution

  Some papers may be too thick to place inside the Carrier Sheet.
  Use documents that meet the requirements.

  ➡ Conditions for Using the Carrier Sheet (page 98)

Part of the Image Appears Missing in the Case Where the Carrier Sheet Is Used

Check the following points

- Did you place several small documents (such as photos or postcards) in the Carrier Sheet for scanning? (page 254)
- Is the fold line of the document outside the range of the Carrier Sheet? (page 254)

If the problem still persists, check each item in Before You Contact the Scanner Service Provider (page 256) first, then contact the distributor/dealer where you purchased this product.

- **Did you place several small documents (such as photos or postcards) in the Carrier Sheet for scanning?**

Solution

Place only one document (such as a photo or postcard) at a time in the Carrier Sheet.

- **Is the fold line of the document outside the range of the Carrier Sheet?**

Solution

If the fold line of the document is outside the range of the Carrier Sheet, part of the image may appear missing around the fold line.
Place the document so that the fold line of the document is placed about 1 mm inside from the edge of the Carrier Sheet.

Forgotten Admin Password

Solution

For details about the factory default administrator password, refer to Admin Password (page 336).
If you have forgotten the current password, contact the distributor/dealer where you purchased this product after checking the scanner details listed in Before You Contact the Scanner Service Provider (page 256).

An Error Occurs When Entering the Default Administrator Password

Check the following points

- Is the default administrator password that you entered correct? (page 255)

If the problem still persists, check each item in Before You Contact the Scanner Service Provider (page 256) first, then contact the distributor/dealer where you purchased this product.

- **Is the default administrator password that you entered correct?**

Solution

You can check the default administrator password on the label.
For details about the label, refer to Checking the Product Labels (page 258).

Before You Contact the Scanner Service Provider

This section explain about actions to take and items to check before contacting the distributor/dealer where you purchased this product.

Actions to Take Before You Contact the Scanner Service Provider

If you encounter any errors or troubles while using the scanner, take the following measures before you contact the scanner service provider:

- Make sure that sufficient power is supplied. Do not use an extension cable.
- Use the AC cable and AC adapter that are supplied.
- Refer to Daily Care (page 168) to clean the inside of the scanner.
- Turn the scanner off then back on.

If the problem still persists, check each item in Items to Check Before You Contact the Scanner Service Provider (page 256) first, then contact the distributor/dealer where you purchased this product.

Items to Check Before You Contact the Scanner Service Provider

- **General**

Item	Findings
Model name	Example: fi-8600 ➡ Checking the Product Labels (page 258)
Serial No.	Example: XXXX000001 ➡ Checking the Product Labels (page 258)
Date of manufacture	Example: 20XX-01 (January 20XX) ➡ Checking the Product Labels (page 258)
Date of purchase	
Symptom	
Frequency of occurrence	Example: Constant/Intermittent
Warranty	
Options used	Example: Carrier Sheet ➡ Scanner Options (page 348)

- **Error Status**

Computer Connection Issues

Item	Findings
Operating system (Windows)	
Error message	
Interface	Example: USB interface
Interface controller	Example: A LAN board is used.
Connection method	Example: USB, Wired LAN

Feeding Issues

Item	Findings
Paper Type	
Main purpose of use	
Date of last cleaning	
Date of consumable replacement	

Image Quality Issues

Item	Findings
Scanner driver and version	
Interface controller	Example: A LAN board is used.
Operating system (Windows)	
Application	Example: PaperStream ClickScan
Scanning sides	Example: front, back, both
Resolution	Example: 600 dpi, 75 dpi
Image mode	Example: color, grayscale, black & white

Other

If possible, send the output image and a photo that shows the paper condition by email.

Checking the Product Labels

This section explains about the product labels on the scanner.
The label is located on the back of the scanner.

- fi-8600
  Remove the ADF paper chute (feeder) to check it.

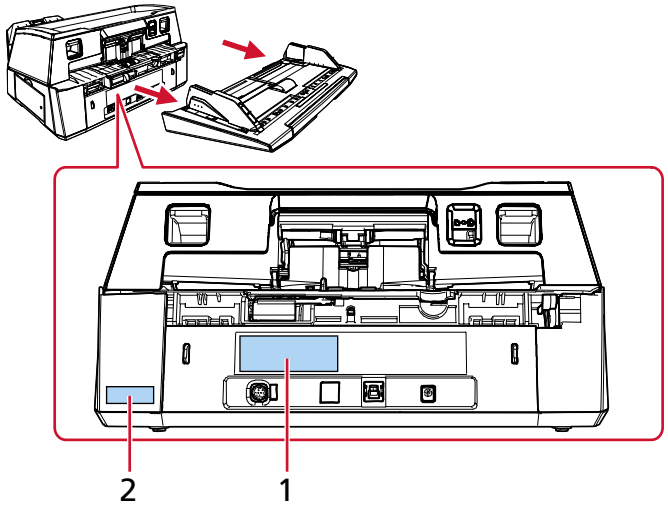

- fi-8700/fi-8700S

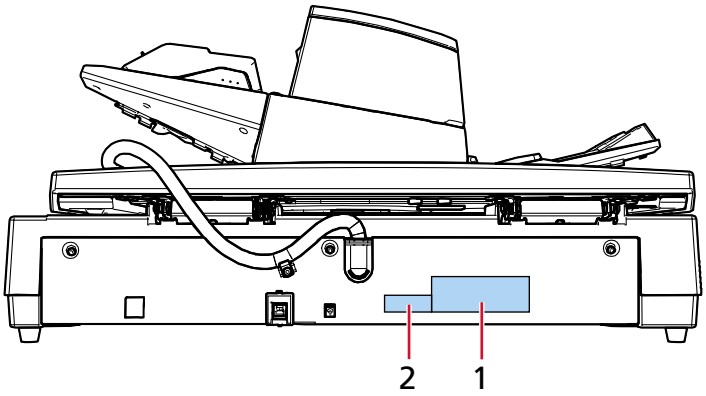

Label 1 (example)

Shows the scanner information.

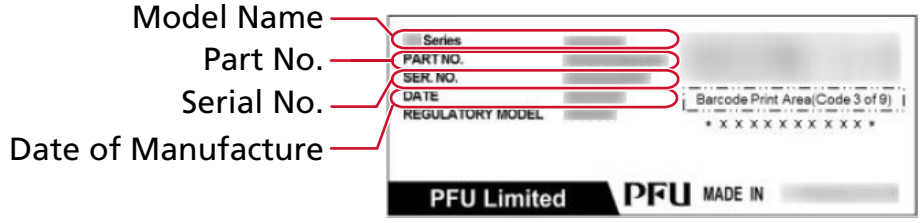

Label 2 (example)

Shows the default administrator password. The xxxxxxxx (8-digit number) part is the password.



Scanner Settings (Software Operation Panel)

This section explains how to use Software Operation Panel to configure the scanner settings. With Software Operation Panel, you can configure settings for operations of the scanner and management of the consumable parts.

Starting Up Software Operation Panel

ATTENTION

- Do not start up Software Operation Panel during a scan.
- If you change the Software Operation Panel settings while the scanner driver window is displayed, the changes may not be applied immediately. In that case, close the scanner driver window and open it again.
- Do not use the operator panel while Software Operation Panel is running.

1 Check that the scanner is connected to your computer.

- When using a USB connection
  Connect the scanner to the computer using a USB cable.
- When using a wired LAN connection
  Connect the scanner to the network, and select the scanner using Scanner Selection Tool.

  ➡ Network (page 332)

  ➡ Starting Up IP Address Setting Tool (page 354)
  If you are not in a DHCP environment, you need IP Address Setting Tool.

  ➡ Starting Up Scanner Selection Tool (page 353)

2 Start Software Operation Panel.

- For Windows 10/Windows Server 2016/Windows Server 2019/Windows Server 2022
  Click [Start] menu → [fi Series] → [Software Operation Panel].
- For Windows 11/Windows Server 2025
  Click [Start] menu → [All apps] → [fi Series] → [Software Operation Panel].

If the scanner selection window appears, select the scanner for which you want to launch Software Operation Panel, and click the [Select] button.

The Software Operation Panel window appears.

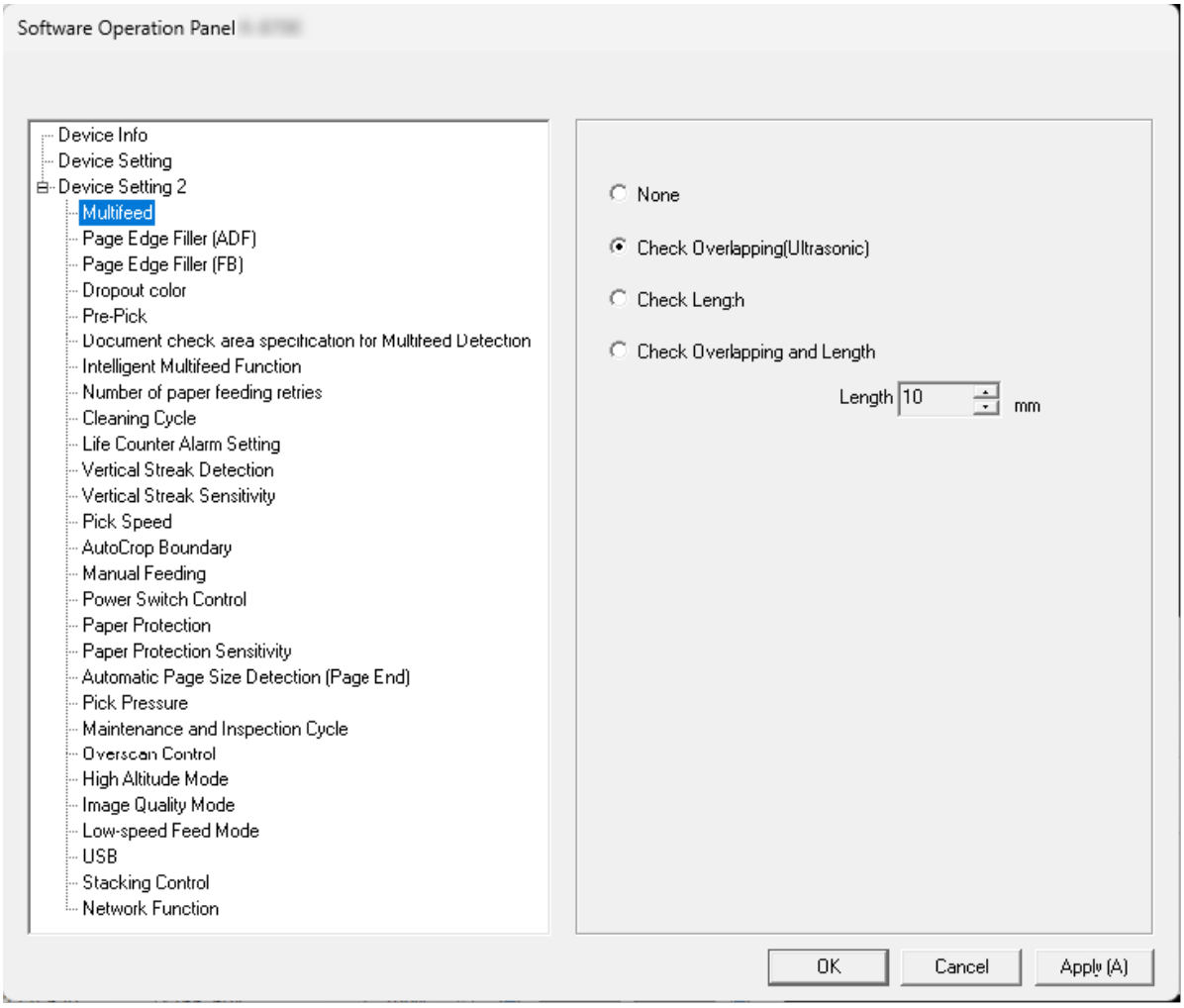

The Software Operation Panel icon is displayed in the menu that appears when you click ^ in the notification area of the taskbar.
To have the Software Operation Panel icon always displayed in the notification area, drag and drop the icon onto the notification area.

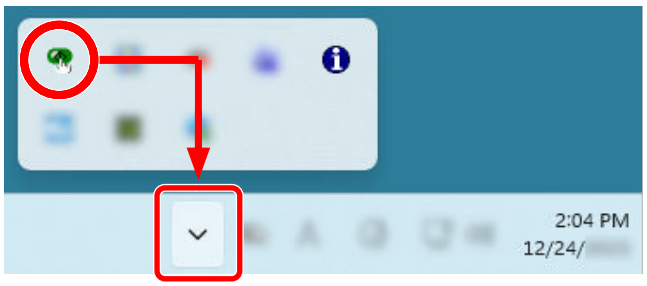

Setting Software Operation Panel to [View Only mode]

By setting a password, Software Operation Panel can run in [View Only mode] which allows users to only view the scanner settings.
The scanner settings can be configured if no password is set.
In order to prevent unnecessary changes to the settings, a password can be used to restrict user operations.

Setting [View Only mode]

Set Software Operation Panel to [View Only mode].

1 Set a password.

➡ Setting a Password (page 267)

2 Right-click the Software Operation Panel icon in the notification area of the taskbar, and select [View Only mode] from the menu.

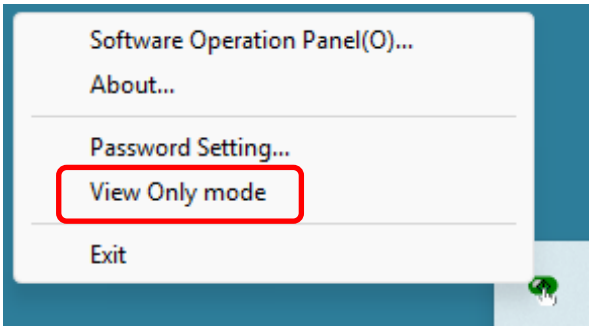

Software Operation Panel enters [View Only mode].

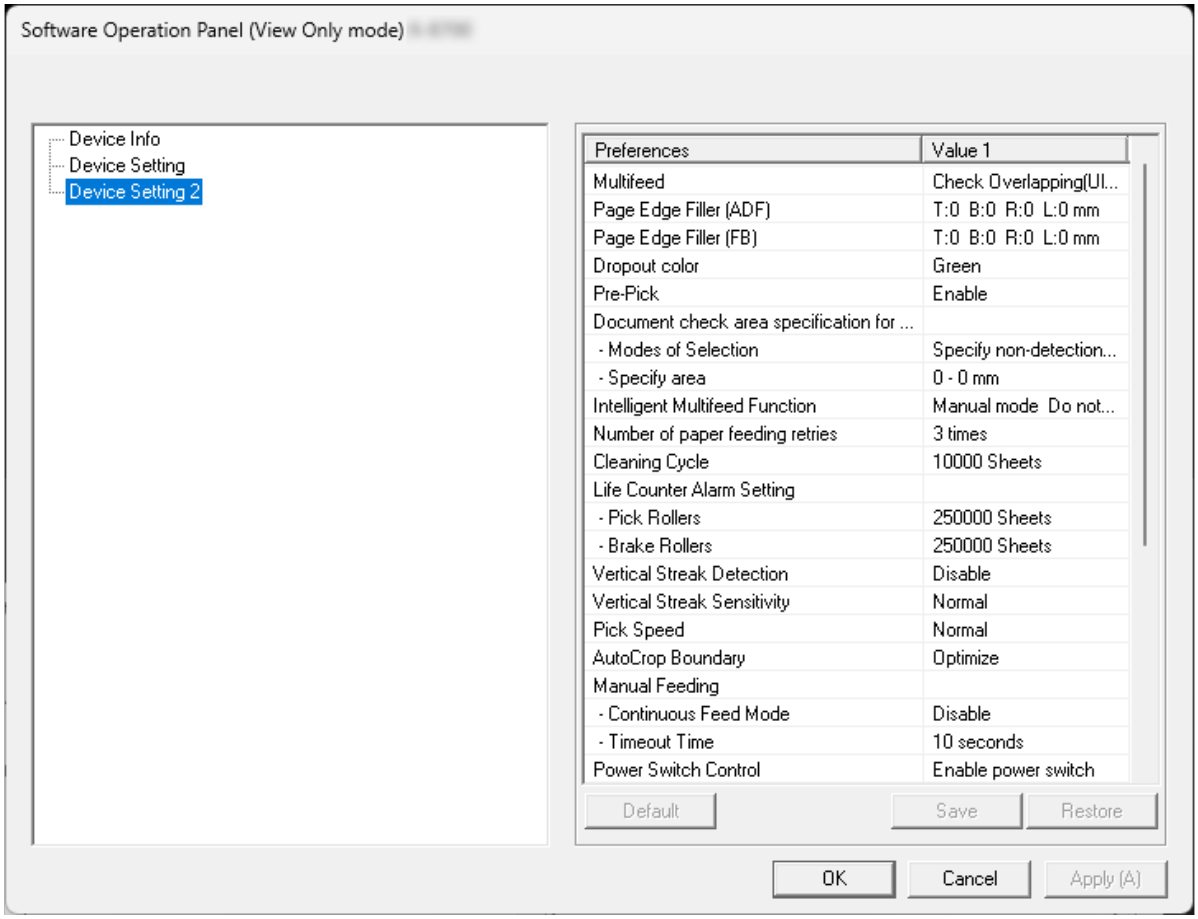

TIP

In [View Only mode], a check mark appears next to [View Only mode] in the menu that is displayed by right-clicking the Software Operation Panel icon in the notification area.

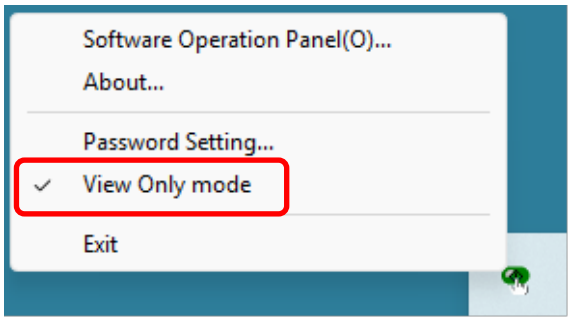

Exiting [View Only mode]

Exit [View Only mode] on Software Operation Panel in the following procedure.

1 Right-click the Software Operation Panel icon in the notification area of the taskbar, and select [View Only mode] from the menu.

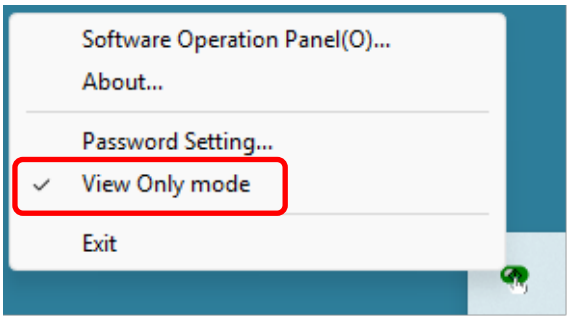

2 Enter the current password and click the [OK] button.

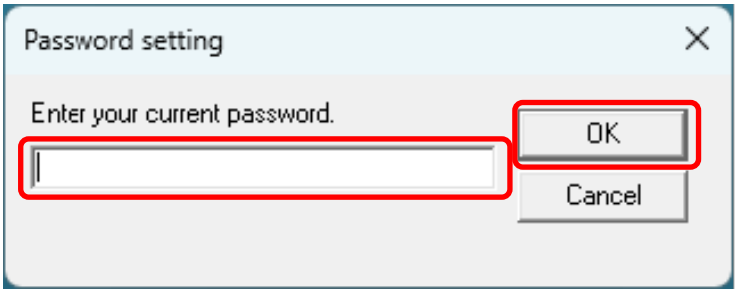

Software Operation Panel exits [View Only mode], and the scanner settings can now be changed.

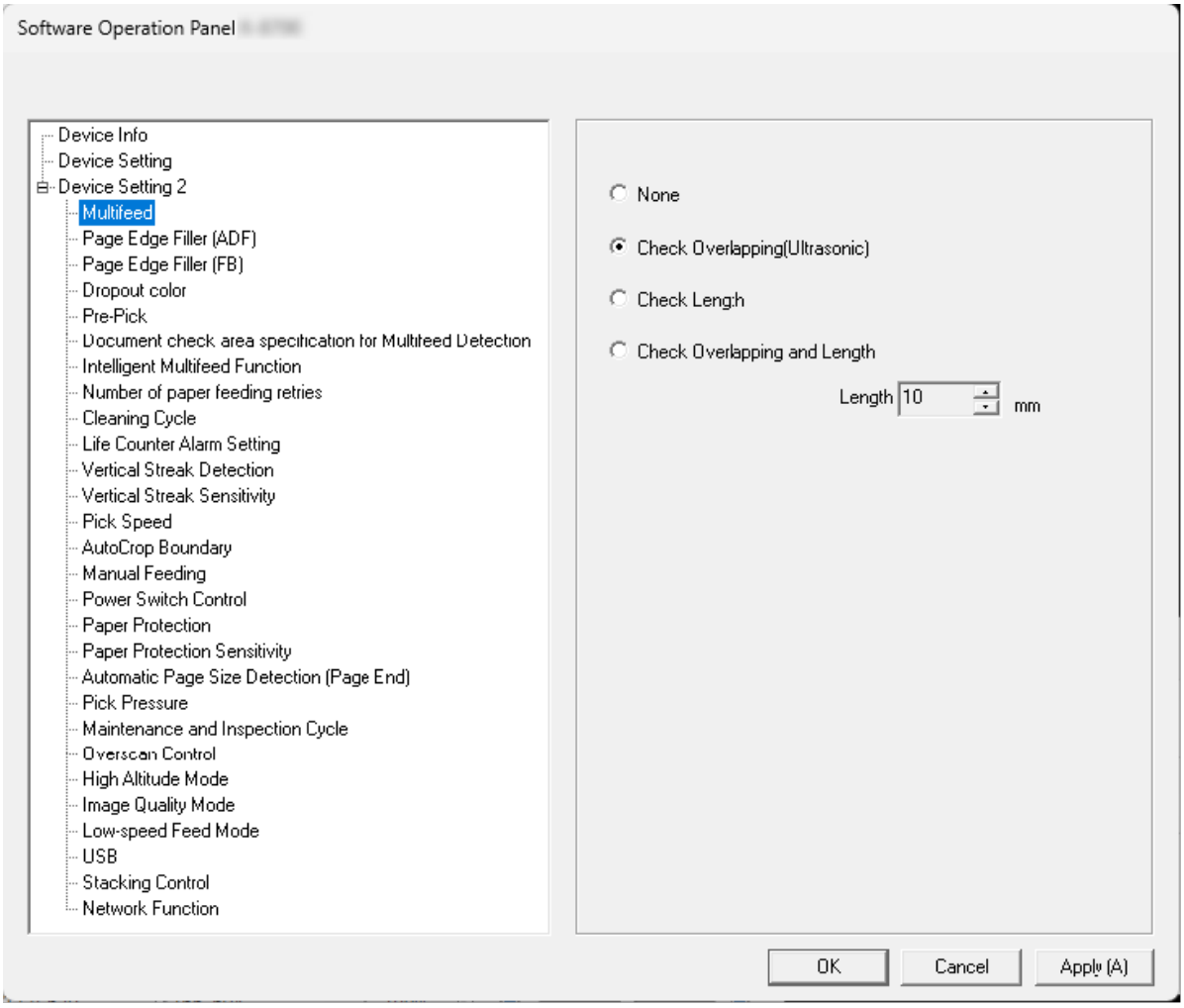

TIP

When Software Operation Panel exits [View Only mode], the check mark next to [View Only mode] disappears from the menu that is displayed by right-clicking the Software Operation Panel icon in the notification area.

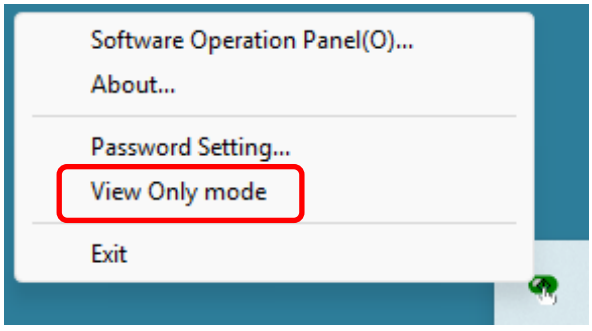

Setting a Password

Set a password in Software Operation Panel.

1 Right-click the Software Operation Panel icon in the notification area of the taskbar, and select [Password setting] from the menu.

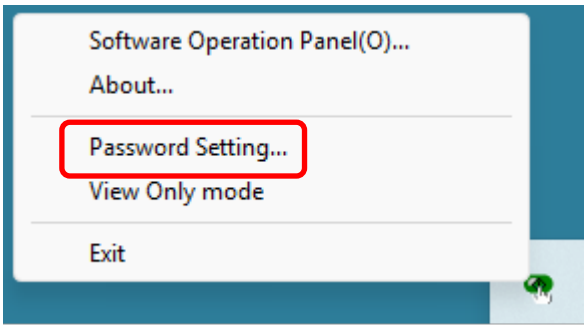

2 Enter your password twice and click the [OK] button.

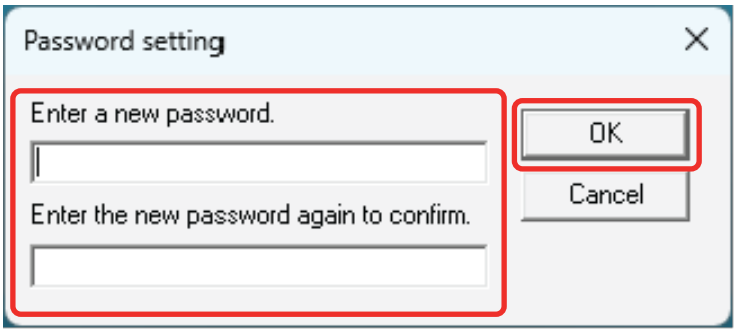

- Up to 32 characters
- Alphanumeric characters (a to z, A to Z, 0 to 9)

A message window appears.

3 Click the [OK] button.

The password is set.

Changing the Password

1 Right-click the Software Operation Panel icon in the notification area of the taskbar, and select [Password setting] from the menu.

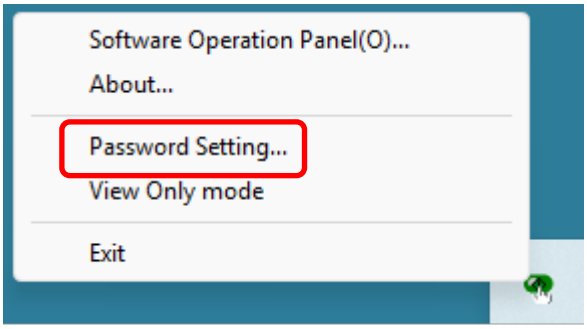

2 Enter the current password and click the [OK] button.

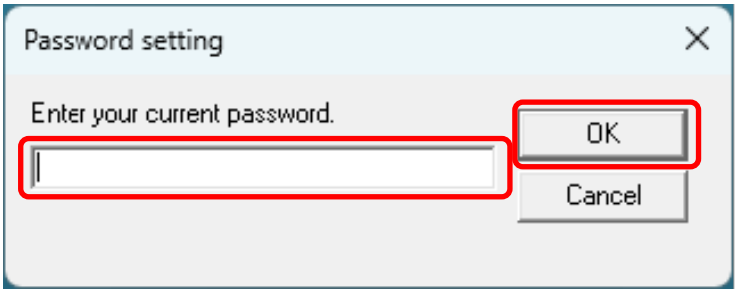

3 Enter the changed password twice and click the [OK] button.

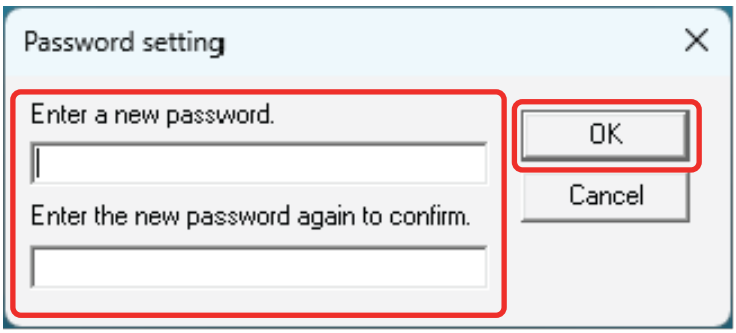

- Up to 32 characters
- Alphanumeric characters (a to z, A to Z, 0 to 9)

A message window appears.

4 Click the [OK] button.

The password is set.

Clearing the Password

1. **Right-click the Software Operation Panel icon in the notification area of the taskbar, and select [Password setting] from the menu.**

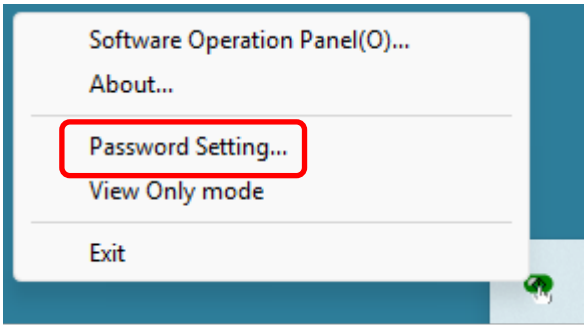

2. **Enter the current password and click the [OK] button.**

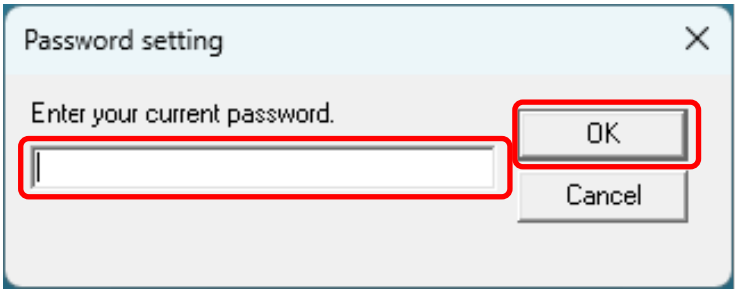

3. **Leave both fields blank and click the [OK] button.**

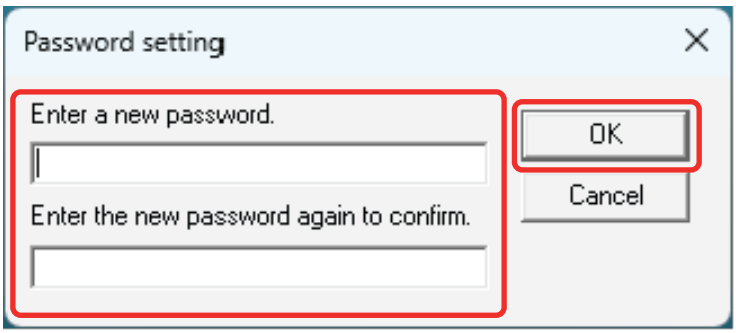

A message window appears.

4. **Click the [OK] button.**

The password is cleared.

Resetting the Password

If you forgot your password, reset it.

1 Right-click the Software Operation Panel icon in the notification area of the taskbar, and select [Password setting] from the menu.

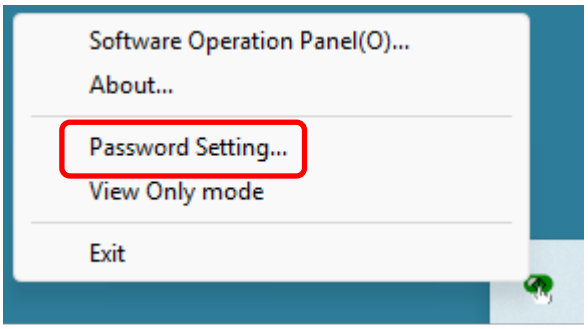

2 Enter the default password which is "fi-scanner", and click the [OK] button.

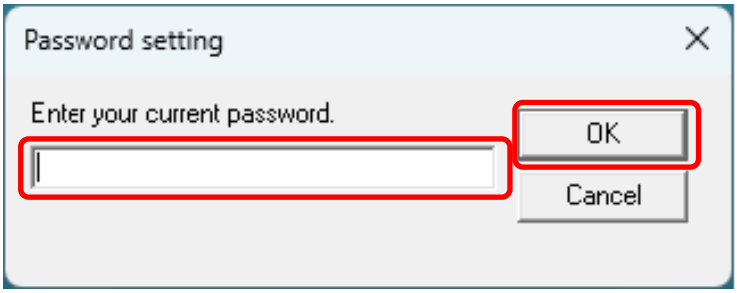

3 Enter the changed password twice and click the [OK] button.

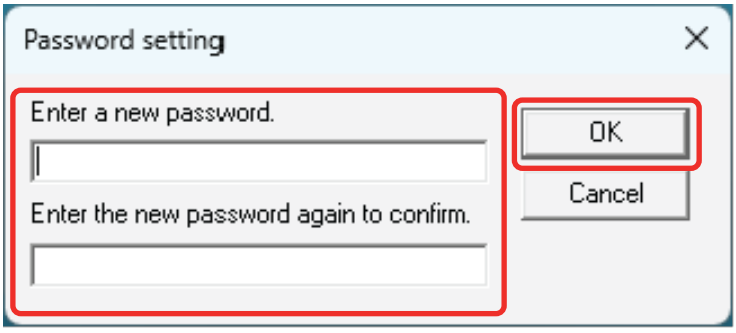

- Up to 32 characters
- Alphanumeric characters (a to z, A to Z, 0 to 9)

A message window appears.

4 Click the [OK] button.

The password is set.

Setting Items

Software Operation Panel allows the configuration of the settings that are related to scanning documents or managing consumable parts for the scanner.
The following lists are used for configuration.

- Device Setting
  You can configure settings that are related to counting the number of sheets scanned and managing consumable parts. You can also configure settings that are related to managing the power of a scanner and adjusting the position to start the scan.
- Device Setting 2
  You can configure settings that are related to scanning documents.

Device Setting

1 Start Software Operation Panel.

➡ Starting Up Software Operation Panel (page 260)

2 From the list, select [Device Setting] and click the [Offset] button.

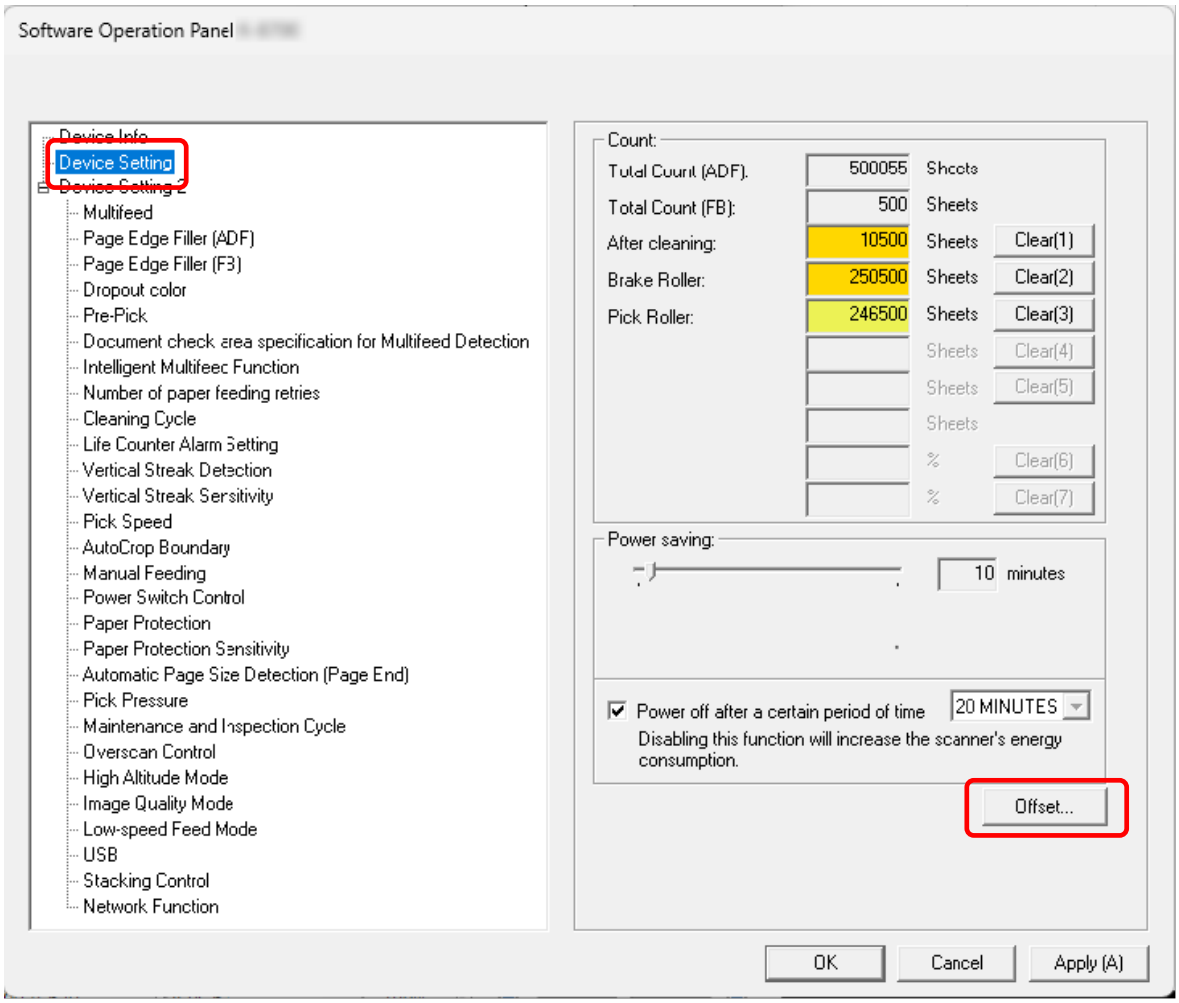

The [Offset] window appears.

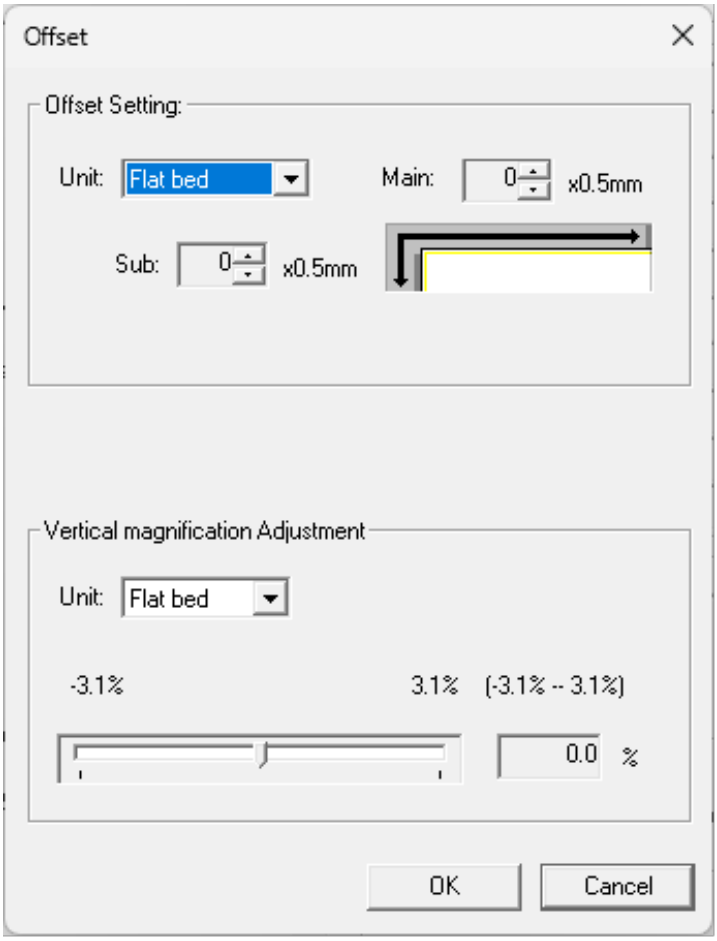

Items that can be configured in these windows are as follows:

Setting Item	Description
Count (Checking/Clearing)	The status of each consumable part can be viewed to determine when to replace or clean the consumables. When you have replaced or cleaned a consumable part, clear the corresponding counter.
Power saving	Specify the waiting time before the scanner enters power saving mode.
Offset Setting	Specify a starting position for scanning.
Vertical magnification Adjustment	Specify the magnification level for the feed direction.

Device Setting 2

1 Start Software Operation Panel.

➡ Starting Up Software Operation Panel (page 260)

2 From the list, select [Device Setting 2].

The settings that are configured in [Device Setting 2] are listed.

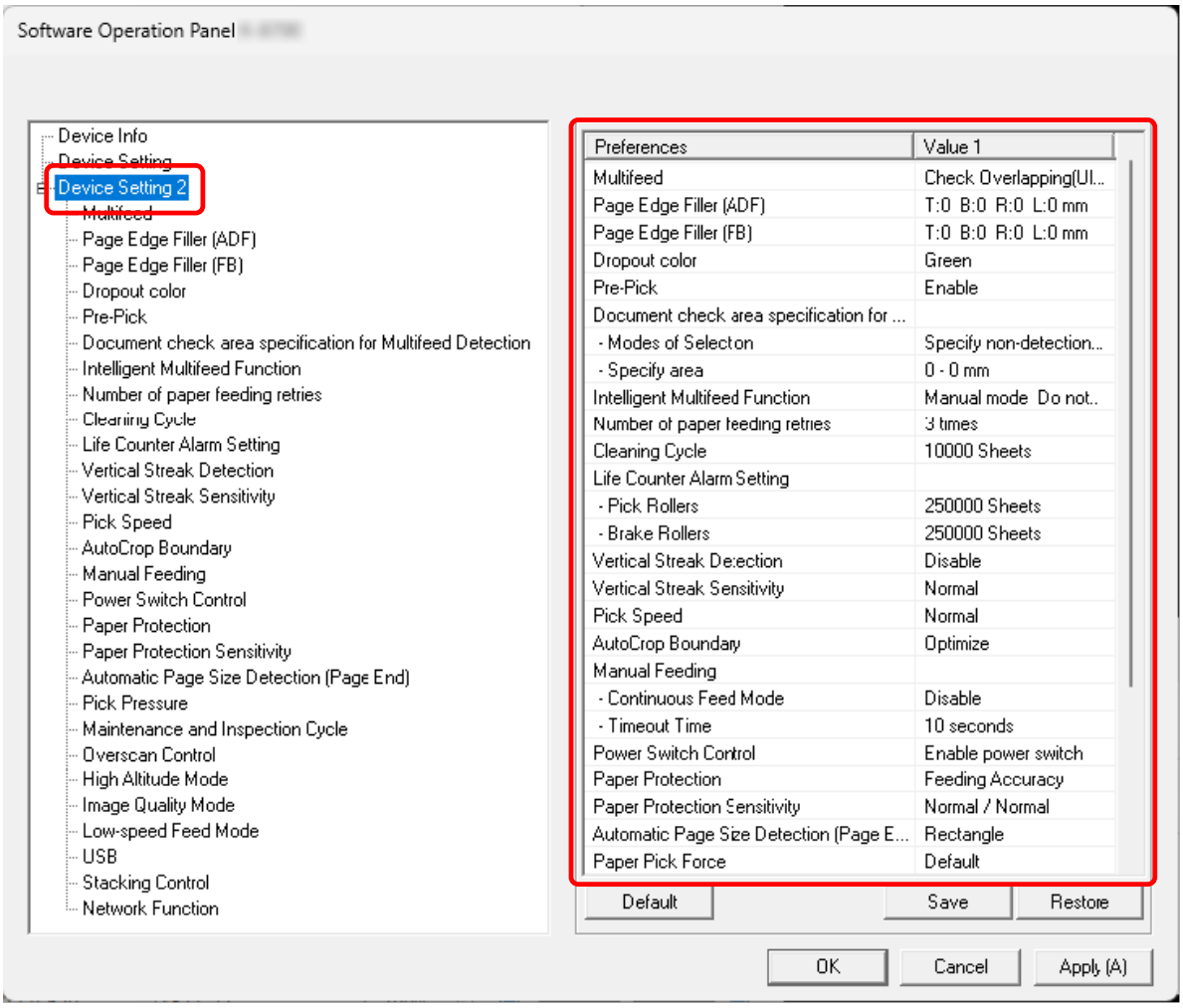

TIP

- The Software Operation Panel settings can be restored to the factory default.
  To restore the settings to the factory default, click the [Default] button. After a message is displayed, click the [OK] button.
  Note that the settings you have configured will be cleared.
- The settings for [Device Setting 2] in Software Operation Panel can be backed up.
  To back up the settings for [Device Setting 2], click the [Save] button, then specify the file name and click the [Save] button in the displayed window.
- You can use a backup file of the settings for [Device Setting 2] in Software Operation Panel to restore the settings on other scanners only if the scanner type is the same.

To restore the settings, click the [Restore] button, then specify the backup file and click the [Open] button in the displayed window. After a message is displayed, click the [OK] button. Note that restoration cannot be performed for a different scanner model.

Items that can be configured are as follows:

Setting Item	Description
Multifeed	Configure the settings to detect overlapped documents during a scan.
Page Edge Filler (ADF)/Page Edge Filler (FB) [fi-8700/fi-8700S]	Configure the settings to fill in black streaks and shadows around the edges of the scanned image.
Dropout Color	When outputting black & white and grayscale images, you can exclude one color from being scanned by selecting red, green, blue (three primary colors), or white.
Pre-Pick	Specify this to shorten the scanning time when scanning more than one document.
Document check area specification for Multifeed Detection	Specify a range in which not to detect overlapped documents or a range in which to detect them.
Intelligent Multifeed Function	Configure the setting to automatically ignore certain patterns of overlapped documents when the setting to detect overlapped documents is enabled.
Number of paper feeding retries	Specify the number of feeding retries when a document is not fed from the ADF paper chute (feeder).
Cleaning Cycle	Specify the cleaning cycle for the scanner inside.
Life Counter Alarm Setting	Specify the replacement cycle for the consumables.
Vertical Streak Detection	You can configure the settings for detecting dirt on the glass.
Vertical Streak Sensitivity	Specify the sensitivity level to detect vertical streaks (dirt on the glass) when [Enable] is selected for [Vertical Streak Detection].
Pick Speed	Specify the timing of when document feeding is started.
AutoCrop Boundary	When the scanner is set to detect the document size automatically, specify whether or not to optimize (round up/down) the fractional part of the scanned image.
Manual Feeding	Specify this to continue loading and scanning documents repeatedly after starting scanning.
Power Switch Control	Configure the settings for turning the scanner's power on and off.

Setting Item	Description
Paper Protection	Configure the setting to detect feeding errors.
Paper Protection Sensitivity	Specify the sensitivity level for detecting feeding errors when the paper protection function is enabled.
Automatic Page Size Detection (Page End)	For documents with index stickers or index tabs (documents with index tabs), or non-rectangular documents, configure this setting to scan beyond the document edge detected by the scanner so that the scanned image includes the index stickers or index tabs.
Pick Pressure	Set the pick pressure for feeding paper.
Maintenance and Inspection Cycle	Specify the maintenance and inspection cycle for the scanner that is performed by a service engineer.
Overscan Control	Specify whether or not to prevent a part of an image from being missing when documents are fed skewed.
High Altitude Mode	Enable this mode to use the scanner at an altitude of 2,000 m or higher.
Image Quality Mode	To obtain an image quality that is close to the image quality for scanning with fi-7700/fi-7600/fi-7700S, set the image quality mode.
Low-speed Feed Mode	Specify this to slow down the scanning speed in order to protect the documents.
USB	Change the USB setting if an error occurred on a computer during communication. This setting cannot be configured when the scanner is connected via a wired LAN.
Stacking Control	This option allows you to slow down the ejecting speed when documents are ejected, preventing scanned documents from scattering.
Network Function	Specify whether or not to use the scanner only via the USB connection. This setting cannot be configured when the scanner is connected via a wired LAN.

Settings Related to Sheet Counters

Checking the Sheet Counters

The status of each consumable part can be viewed to determine when to replace or clean the consumables.
The background color of the counter changes as it gets closer to the time to replace the consumables or to clean the scanner.
The color of each counter changes as follows:

- [Brake Roller]/[Pick Roller] counters
  These counters turn light yellow when the sheet count after the consumable replacement reaches 95% of the value specified in Specifying the Cycle to Replace Consumables [Life Counter Alarm Setting] (page 282) in Software Operation Panel, and turn yellow when the sheet count reaches 100%.
- [After cleaning] counter
  This counter turns yellow when the sheet count after cleaning reaches the value specified in Scanner Cleaning Cycle [Cleaning Cycle] (page 281) in Software Operation Panel.
- [Remaining Ink] counter
  This counter turns yellow when the amount of remaining ink reaches below 33% (only displayed when the imprinter is installed).

1. **Start Software Operation Panel.**

   ➡ Starting Up Software Operation Panel (page 260)

2. **From the list, select [Device Setting].**

3 Check each counter.

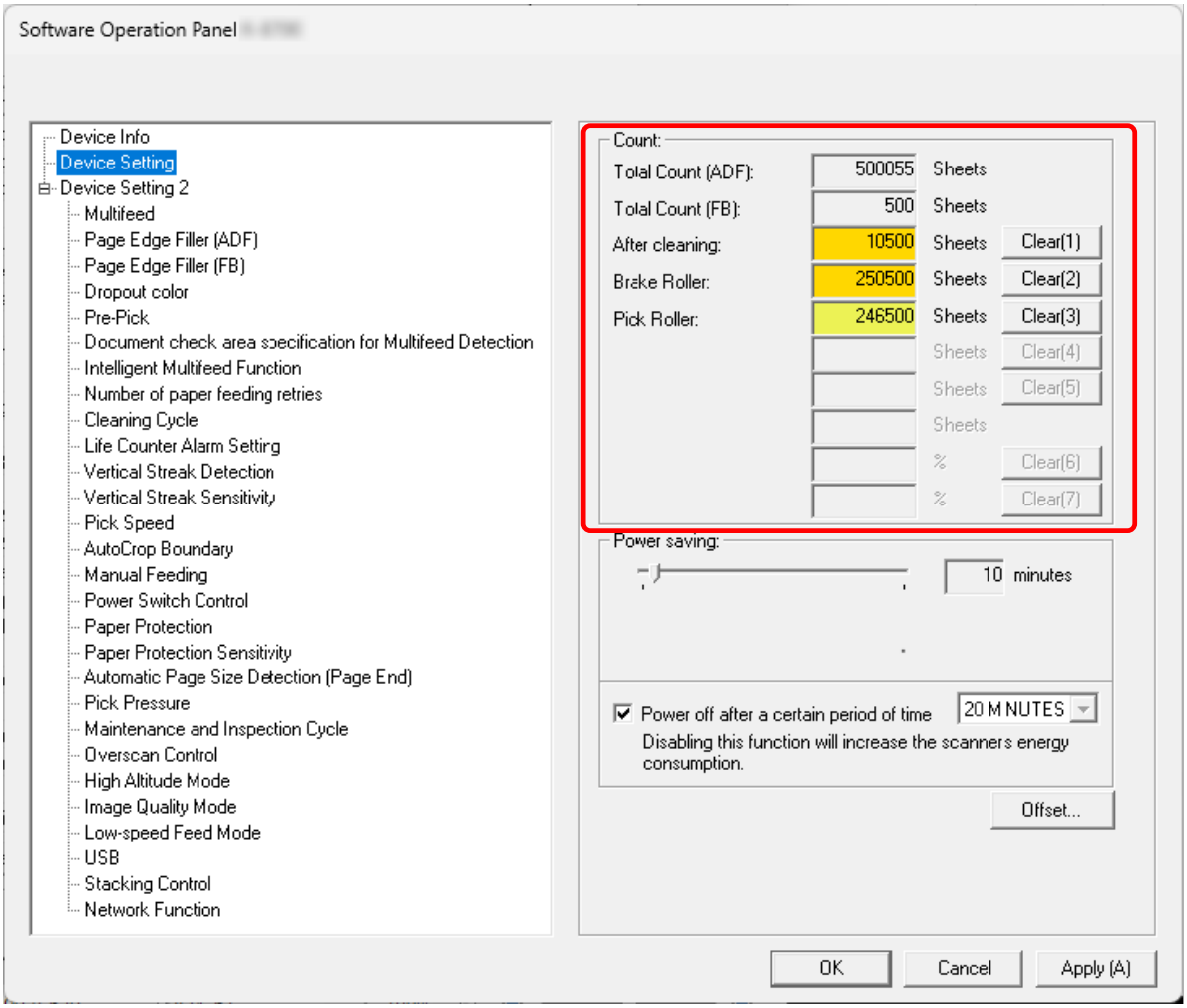

Total Count (ADF)

Total number of sheets scanned using the ADF (in 1 sheet increments)

Total Count (FB) [fi-8700/fi-8700S]

Total number of sheets scanned using the flatbed [fi-8700/fi-8700S] (in 1 sheet increments)

After cleaning

Total number of sheets scanned after the last cleaning (in 1 sheet increments)

Brake Roller

Approximate number of sheets scanned since the last replacement of brake roller (in units of 500)

Pick Roller

Approximate number of sheets scanned since the last replacement of pick rollers (in units of 500)

Remaining Ink

Amount of ink remaining in the print cartridge of the imprinter (only displayed when the imprinter is installed)

The factory default setting for each counter is "0".
The factory default setting for the [Remaining Ink] counter is displayed only when the imprinter is installed.

ATTENTION

If you turned off the scanner by unplugging the power cable, the number of scanned sheets may not be counted in [Total Count].

TIP

This setting can also be checked on the operator panel.

Clearing the Sheet Counters

When you have replaced or cleaned a consumable part, clear the corresponding counter.

1. **Start Software Operation Panel.**

   ➡ Starting Up Software Operation Panel (page 260)

2. **From the list, select [Device Setting].**

3. **Click the [Clear] button for the consumable that you replaced, and click the [Clear] button for [After cleaning] when cleaning is performed.**

   The counter is reset to 0.
   For remaining ink, it is reset to 100.

4. **Click the [OK] button.**

   A message window appears.

5. **Click the [OK] button.**

   The settings are saved.

> **TIP**
>
> This setting can also be cleared on the operator panel.

Messages for Cleaning or Replacing Consumables

The following message may appear on the computer while the scanner is in use.

Example: Message for replacing consumables

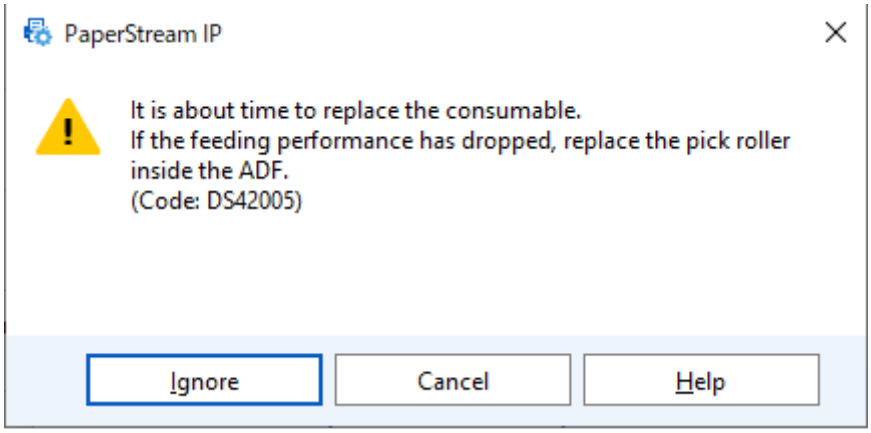

Example: Message for cleaning

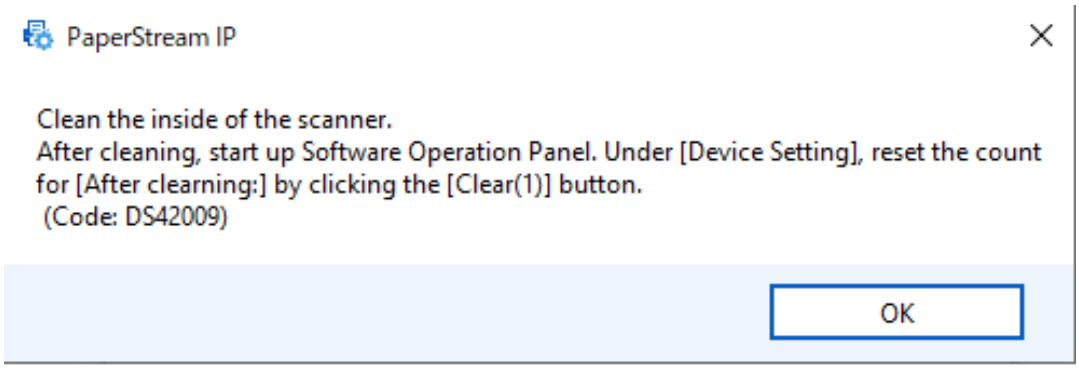

Take the following measures according to the displayed message.

- When a message for replacing consumables appears
  Check the message, and replace the consumable accordingly.
  If you click the [Ignore] button, the message disappears and the scan can be continued. However, it is recommended that you replace the consumable as soon as possible.
  To stop the scan and replace the consumable right away, click the [Cancel] button.
  For details about replacing consumables, refer to the following:
  - Replacing the Brake Roller (page 187)
  - Replacing the Pick Roller (page 191)
- When a message for cleaning appears
  Check the message, and perform cleaning accordingly.
  For details about cleaning, refer to Daily Care (page 168).

Scanner Cleaning Cycle [Cleaning Cycle]

Specify the cleaning cycle for the scanner inside.
The background color of the [After cleaning] counter in [Device Setting] changes to yellow when the counter reaches the specified value for this item.
You can also display a cleaning instruction message that is described in Messages for Cleaning or Replacing Consumables (page 280).

1. **Start Software Operation Panel.**

   ➡ Starting Up Software Operation Panel (page 260)

2. **From the list, select [Device Setting 2] → [Cleaning Cycle].**

3. **Specify a value for the cleaning cycle.**
   The value can range from 1,000 to 255,000 sheets (in increments of 1,000).
   Factory default setting: 10

4. **Specify whether or not to display the cleaning instruction message.**
   The [Show cleaning instructions.] check box is cleared for the factory default settings.

Specifying the Cycle to Replace Consumables [Life Counter Alarm Setting]

Specify the replacement cycle for the consumables.
The background color of the counter for [Brake Rollers] or [Pick Rollers] in [Device Setting] changes to light yellow when the sheet count (after a consumable replacement) reaches 95% of the value specified for this setting and turns yellow when the sheet count reaches 100%.
You can also display the message for replacing consumables, which is described in Messages for Cleaning or Replacing Consumables (page 280).

1. **Start Software Operation Panel.**

   ➡ Starting Up Software Operation Panel (page 260)

2. **From the list, select [Device Setting 2] → [Life Counter Alarm Setting].**

3. **Specify a value as the replacement cycle for each of the rollers.**
   The value can range from 10,000 to 2,550,000 sheets (in increments of 10,000).
   Factory default setting: 25

Settings Related to Scanning

Adjusting the Starting Position for Scanning [Offset Setting/Vertical magnification Adjustment]

When the output position of the scanned image is not correct or the image appears shortened/elongated (vertically), adjust the offset and the vertical magnification.

ATTENTION

Normally, you should not have to modify anything as the factory default settings already use adjusted values.

1. **Start Software Operation Panel.**

   ➡ Starting Up Software Operation Panel (page 260)

2. **From the list, select [Device Setting] and click the [Offset] button.**

3. **Adjust the level of offset/vertical magnification as needed.**

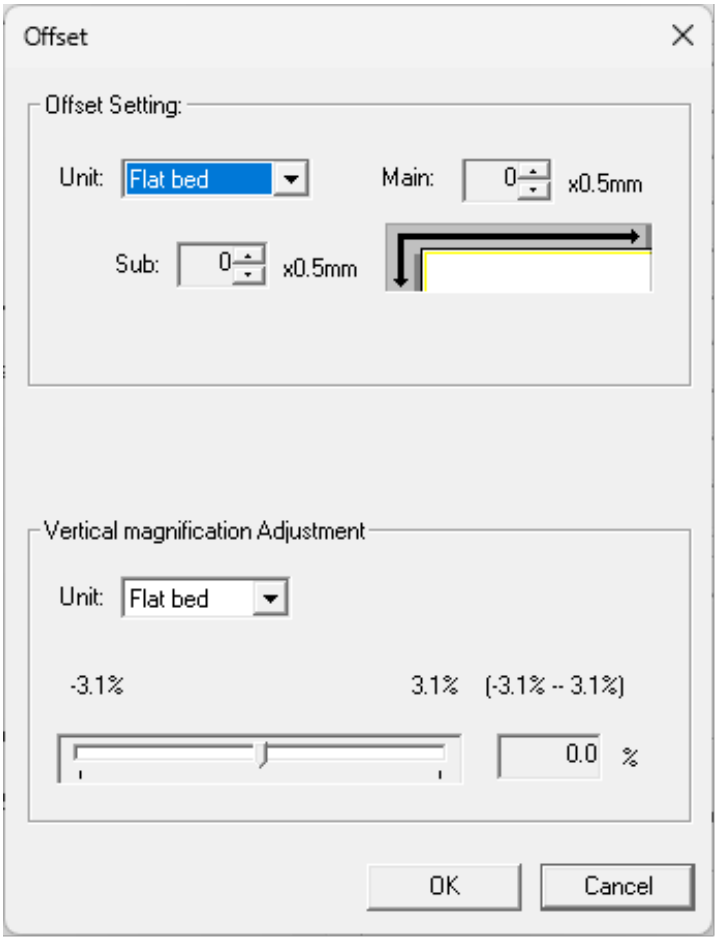

Offset Setting

Unit

Select [Flat bed] [fi-8700/fi-8700S], [ADF(front)], or [ADF(back)] as the unit for an offset adjustment.

Main

Specify the horizontal (width) offset.
The specified value can range from -2 to +3 mm (in increments of 0.5).
Factory default setting: 0

Sub

Specify the vertical (length) offset at the top of a page.
The specified value can range from -2 to +3 mm (in increments of 0.5).
Factory default setting: 0

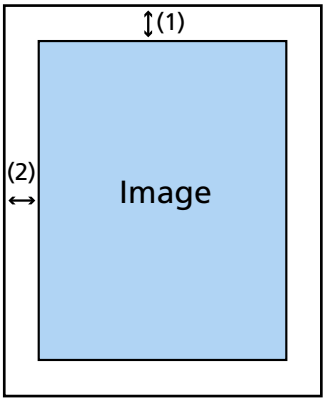

(1): Main= -2 to 3 mm
(2): Sub= -2 to 3 mm
(in increments of 0.5 mm)

Vertical magnification Adjustment

Unit

Select [Flat bed] [fi-8700/fi-8700S] or [ADF] as the unit for an offset adjustment.

Vertical magnification Adjustment

Specify the vertical (length) magnification.
The specified value can range from -3.1 to +3.1% (in increments of 0.1).
Factory default setting: 0.0

Removing Shadows/Streaks that Appear around Edges of Images [Page Edge Filler (ADF)/Page Edge Filler (FB) [fi-8700/fi-8700S]]

Configure the settings to fill in black streaks and shadows around the edges of the scanned image.
Depending on the condition of the documents that you scan, the shadow of a document may appear as black streaks on the edges of the scanned image.
In this case, remove the black streaks by filling in the edges of the scanned image.

1 **Start Software Operation Panel.**

➡ Starting Up Software Operation Panel (page 260)

2 **From the list, select [Device Setting 2] → [Page Edge Filler (ADF)] or [Page Edge Filler (FB) [fi-8700/fi-8700S]].**

3 **Specify the width of each margin (Top/Bottom/Right/Left) to fill in.**

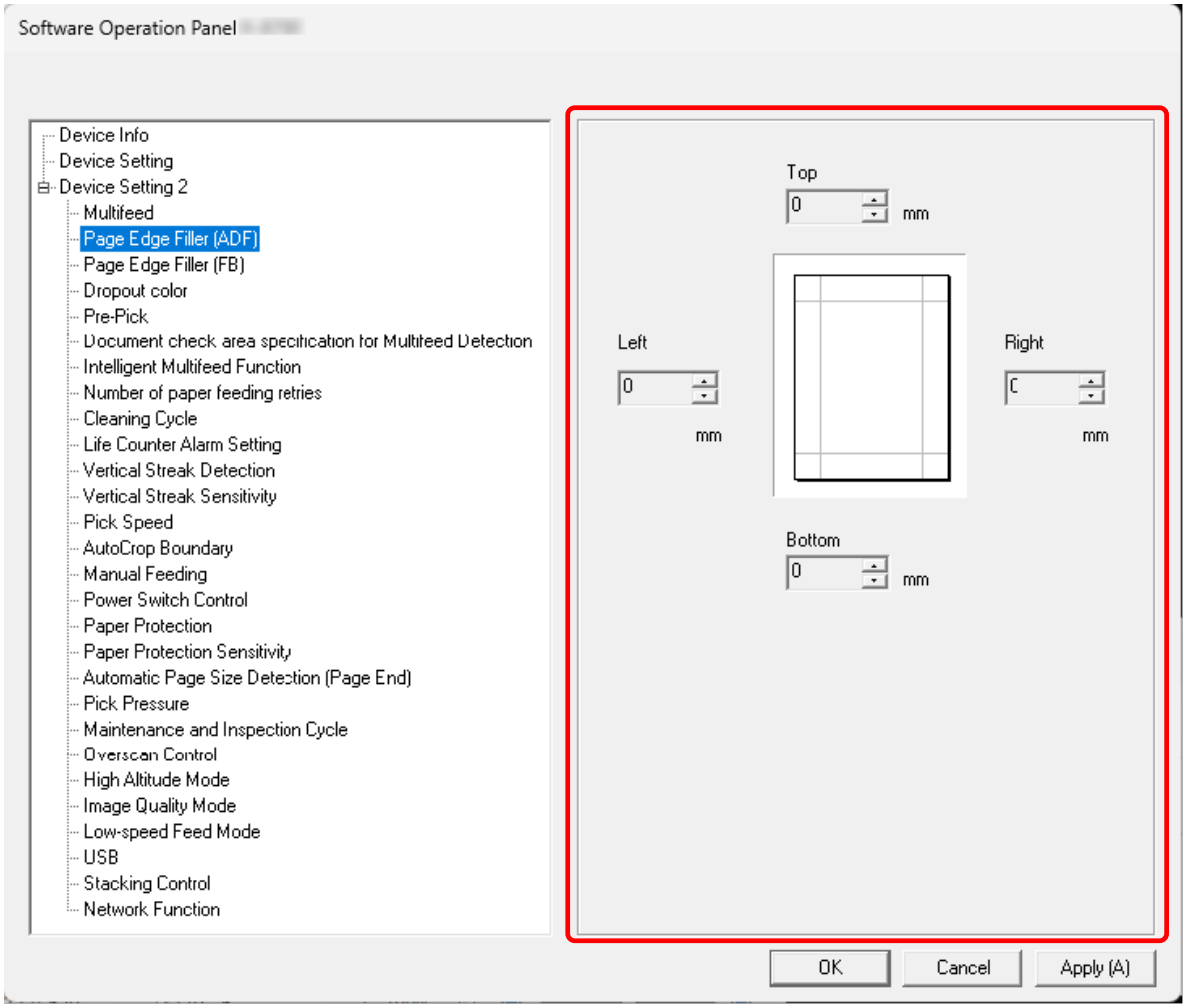

Factory default setting: 0

The specified area is filled in white or black, according to the background color.

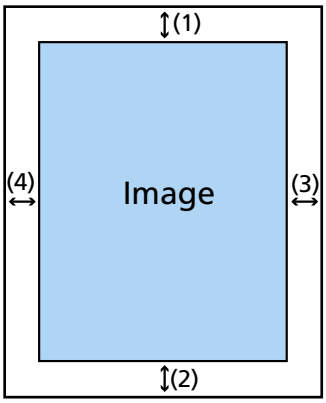

ADF

(1): Top = 0 to 15 mm
(2): Bottom = -7 to 7 mm
(3): Right = 0 to 15 mm
(4): Left = 0 to 15 mm

FB [fi-8700/fi-8700S]

(1): Top = 0 to 15 mm
(2): Bottom = 0 to 15 mm
(3): Right = 0 to 15 mm
(4): Left = 0 to 15 mm

(in 1 mm increments)

ATTENTION

Note that if the target range of page edge filler is too wide, some characters near the edge may appear missing.

TIP

- You can change the background color to black or white in the scanner driver.
  For details, refer to the help for the scanner driver.
- Depending on the value you specify for the bottom margin of [Page Edge Filler (ADF)], the page edge filler function operates as follows:
  - 1 to 7 mm
    Fills in the specified area with the background color from the bottom edge of the image towards the inside.
  - -1 to -7 mm
    Outputs the image without filling in the specified area with the background color from the bottom edge of the image towards the outside. (Outputs the image with the specified area added when [Page End Detection] is set in the scanner driver.)

- This setting can also be configured in the scanner driver. The page edge filler is applied to images whose edges have already been filled according to the settings in Software Operation Panel.

Configuring the Scan Setting to Drop Out Specified Colors When Scanning [Dropout Color]

When outputting black & white and grayscale images, you can exclude one color from being scanned by selecting red, green, blue (three primary colors), or white.
For example, when scanning a document with black characters and a green frame, if you select green for the dropout color, only the black characters of the document are scanned.

1. **Start Software Operation Panel.**

   ➡ Starting Up Software Operation Panel (page 260)

2. **From the list, select [Device Setting 2] → [Dropout Color].**

3. **Select a color that you want to remove.**

   Red, Green, Blue, White

   The selected color is removed.
   Factory default setting: Green

   None

   No color is removed.

ATTENTION

If the color of the part to be excluded is too dark, the color may not be excluded.

TIP

A color other than red, green, blue, or white can also be specified in the scanner driver. This setting overrides the setting in Software Operation Panel.

Shortening the Scanning Intervals [Pre-Pick]

Specify this to shorten the scanning time when scanning more than one document.
"Pre-pick" refers to feeding the next document into the ADF before ejecting the current document being scanned.

1. **Start Software Operation Panel.**

   ➡ Starting Up Software Operation Panel (page 260)

2. **From the list, select [Device Setting 2] → [Pre-Pick].**

3. **Select whether to enable or disable [Pre-Pick].**
   Factory default setting: Enable

TIP

- If you cancel in the middle of scanning while pre-pick is enabled, you have to remove the pre-picked document, then load the document again.
- This setting can also be configured in the scanner driver or on the operator panel.
  Note that priority is given to the scanner driver setting.

Specifying the Number of Retries for Paper Feeding [Number of paper feeding retries]

Specify the number of feeding retries when a document is not fed from the ADF paper chute (feeder).

1. **Start Software Operation Panel.**

   ➡ Starting Up Software Operation Panel (page 260)

2. **From the list, select [Device Setting 2] → [Number of paper feeding retries].**

3. **Specify the number of paper feeding retries.**
   The value can range from 1 to 12 times.
   Factory default setting: 3 times

> **TIP**
>
> This setting can also be configured on the operator panel.

Setting the Timing at Which Document Feeding is Started [Pick Speed]

Specify the timing of when document feeding is started.
When overlapped documents or paper jams occur frequently, delaying the timing of document feeding may improve the performance.
This setting is effective when you scan thin paper.

1. **Start Software Operation Panel.**

   ➡ Starting Up Software Operation Panel (page 260)

2. **From the list, select [Device Setting 2] → [Pick Speed].**

3. **Select the timing at which document feeding into the scanner is started.**

   Normal

   This is the factory default setting.

   Slower

   The timing at which document feeding is started is slower than [Normal].

ATTENTION

The total time for scanning is longer because the start timing of document feeding is delayed.

TIP

This setting can also be configured on the operator panel.

Settings for Image Sizes [AutoCrop Boundary]

When the scanner is set to detect the document size automatically, specify whether or not to optimize (round up/down) the fractional part of the scanned image.
When the document size is detected, there may be a fractional part of the scanned image compared to the standard paper size.
Output image size varies depending on how the fractional part is processed.

1. **Start Software Operation Panel.**

   ➡ Starting Up Software Operation Panel (page 260)

2. **From the list, select [Device Setting 2] → [AutoCrop Boundary].**

3. **Select whether to include or exclude the fractional data.**
   Select [Optimize] to prevent document elements from being partially omitted.
   Factory default setting: Optimize

ATTENTION

- While selecting [Optimize] can prevent document elements from being partially omitted, a shadow may appear around the edges of an image.
- When you scan a document with elements such as text on the edges with [Round Down] selected, document elements may be partially omitted in the output image.

Settings for the Paper Protection Function [Paper Protection]

Configure the setting to detect feeding errors.
This function detects feeding errors in the following cases:

- When the scanner detects a document that was abnormally warped by a feeding error
- When the scanner detects paper jam noise

Paper jams due to feeding errors could damage or tear valuable documents.
Detecting a document feeding error and stopping the feed can prevent damage to the document.
This function is effective when you scan documents which are difficult to feed such as thin paper documents.

1 Start Software Operation Panel.

➡ Starting Up Software Operation Panel (page 260)

2 From the listing on the left, select [Device Setting 2] → [Paper Protection].

3 Select a detection method.

Disable

Does not detect feeding errors.

Feeding Accuracy

Stops the scan when the scanner detects a document that was abnormally warped by a feeding error.
This is the factory default setting.

Feeding Noise

Stops the scan when the scanner detects paper jam noise.

Feeding Accuracy & Noise

Stops the scan when the scanner detects a document that was abnormally warped by a feeding error, or when the scanner detects paper jam noise.

ATTENTION

Note that the paper protection function is to prevent damages to documents, but the protection of all documents is not guaranteed.

TIP

- When [Paper Protection] is enabled, in the following cases, the feeding may stop even when the documents are being fed correctly.
  - If you scan a wrinkled document
  - If you scan a document that is not square or rectangular
  - If you scan a document that has a dark background

- If you scan a document that has text or patterned background printed close to the edge
The paper protection function can be disabled only when scanning the document again from the operator panel.

➔ Disabling the Paper Protection Function (page 166)

- If the paper protection function stops document feeding frequently, take measures according to Paper Damage Prevention Errors Occur Frequently (page 238).
- [Paper Protection] is disabled in the following cases.
  - When the setting for using the Carrier Sheet is enabled in the scanner driver
  - When using Manual Single Mode
- This setting can also be configured in the scanner driver or on the operator panel.
Note that priority is given to the scanner driver setting.
When the paper protection setting is set to on in the scanner driver, [Feeding Accuracy & Noise] is enabled regardless of the settings of the operator panel and Software Operation Panel.
Note that when the operator panel settings take priority, the paper protection settings are applied in the following order.

1. Scanner driver
For details, refer to the help for the scanner driver.
2. [19:Paper Protection] on the [Settings Menu] screen of the operator panel

➔ How to Use the Settings Menu (page 109)

3. Software Operation Panel

➔ Settings for the Paper Protection Function [Paper Protection] (page 293)

Specifying the Sensitivity Level for Paper Protection [Paper Protection Sensitivity]

Specify the sensitivity level for detecting feeding errors when the paper protection function is enabled. Documents become abnormally warped or a paper jam noise is made when documents are not fed properly.
Specify the sensitivity level for detecting abnormal document warping or paper jam noise.

1 Start Software Operation Panel.

➡ Starting Up Software Operation Panel (page 260)

2 From the list on the left, select [Device Setting 2] → [Paper Protection Sensitivity].

3 Select the sensitivity level.

- Select the sensitivity level for [Feeding Accuracy].

Low

Decreases the sensitivity level for detecting abnormally warped documents.
Specify this to detect warped documents only when they are highly warped.

Normal

Detects an abnormal document warping with the optimum sensitivity.
This is the factory default setting.

High

Increases the sensitivity level for detecting abnormally warped documents.
Specify this to detect warped documents even when they are only slightly deformed.

> **TIP**
> To detect an abnormal document warping immediately and stop the scan, select [High].

- Select the sensitivity level for [Feeding Noise].

Low

Decreases the sensitivity level to detect paper jam noise.
Specify this to detect only loud paper jam noise.

Normal

Detects paper jam noise with the optimum sensitivity level.
This is the factory default setting.

High

Increases the sensitivity level to detect paper jam noise.
Specify this to detect even slight paper jam noise.

TIP

- To detect paper jam noise immediately and stop the scan, select [High].
- If scanning stops frequently due to the paper protection function, select [Low].
- This setting can also be configured on the operator panel.

Settings for Scanning Documents with Index Tabs or Non-rectangular Documents [Automatic Page Size Detection (Page End)]

For documents with index stickers or index tabs (documents with index tabs), or non-rectangular documents, configure this setting to scan beyond the document edge detected by the scanner so that the scanned image includes the index stickers or index tabs.
To scan documents with index tabs, load the documents so that the edge where the index stickers or tabs are attached is the bottom edge.

➡ Loading Documents with Index Tabs or Non-rectangular Documents (page 90)

1 Start Software Operation Panel.

➡ Starting Up Software Operation Panel (page 260)

2 From the list, select [Device Setting 2] → [Automatic Page Size Detection (Page End)].

3 Select the shape of the document.

Rectangle

Stops the scan when it detects the bottom edge of the document.
This is the factory default setting.

With index tab

Scans up to 35 mm off the bottom edge of the document with a tab.

Non-rectangle

Scans up to 120 mm off the bottom edge of the detected document.

ATTENTION

If you select [With index tab] or [Non-rectangle], the scanning speed will be reduced.

Adjusting the Paper Picking Pressure [Pick Pressure]

Set the pick pressure for feeding paper.
When scanning thin paper or when paper is not being fed smoothly and the pick rollers repetitively rotate aimlessly until paper is fed, adjusting the paper picking pressure improves the performance of the scan.

1 Start Software Operation Panel.

➡ Starting Up Software Operation Panel (page 260)

2 From the list, select [Device Setting 2] → [Pick Pressure].

3 Set the pick pressure for feeding paper.

Low

Select this option for thin paper.
This option is useful for scanning relatively thin paper.
Even thin paper can be fed. However, if you scan a document with a paper type that is not recommended, make sure you test the same type of paper first to check if the document can be scanned.
Scanning thick paper may not feed the paper properly, making the pick rollers repetitively rotate aimlessly.

Default

Default paper picking pressure. Keep this setting for normal use.
This is the factory default setting.

High

Select this option for thick or curled paper.
This option is useful for scanning relatively thick paper.
The pick roller's feeding force is increased, so even documents that are difficult to feed can be fed quickly.
Scanning thin paper may cause a paper jam.

TIP

This setting can also be configured on the operator panel.

Preventing an Image from Missing Any Parts When Documents Are Fed Skewed [Overscan Control]

Specify whether or not to prevent a part of an image from being missing when documents are fed skewed.
If you set [Expand] for [Overscan Control], when documents are fed skewed, the scanning area is automatically widened to prevent the image from missing any parts.

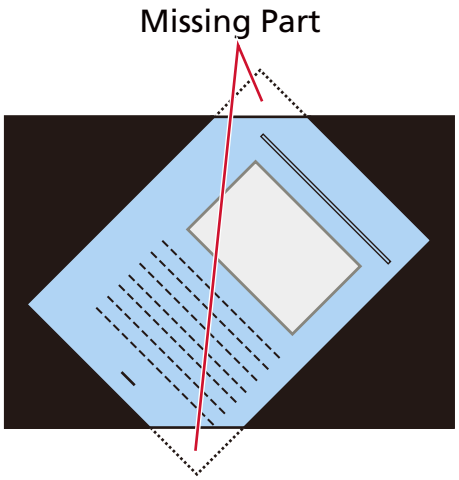

When a part of
an image is missing

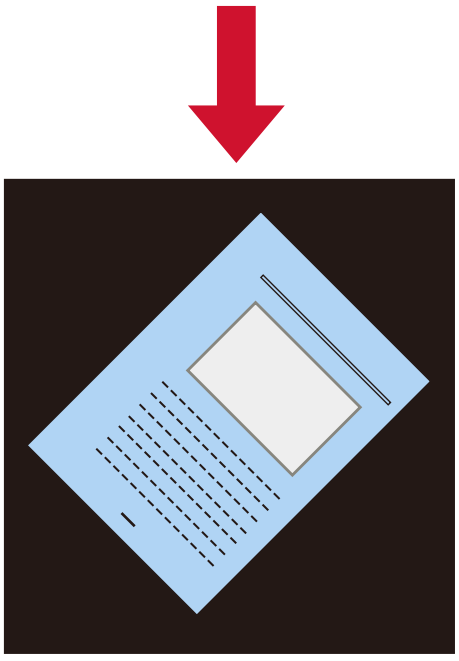

When [Expand] is selected

1 Start Software Operation Panel.

➡ Starting Up Software Operation Panel (page 260)

2 **From the list, click [Device Setting 2] → [Overscan Control].**

3 **Select [Expand].**
Factory default setting: Normal

TIP

- It is recommended that you scan in the largest available paper size.
- This setting can also be configured on the operator panel.

Scanning at High Altitude [High Altitude Mode]

Enable this mode to use the scanner at an altitude of 2,000 m or higher.
Low atmospheric pressure at high altitudes may lower the accuracy in detections for overlapped documents with the ultrasonic sensor.
Setting [Enable] to on for High Altitude Mode improves the accuracy to detect overlapped documents.

1. **Start Software Operation Panel.**

   ➡ Starting Up Software Operation Panel (page 260)

2. **From the list, select [Device Setting 2] → [High Altitude Mode].**

3. **Select [Enable].**
   Factory default setting: Disable

Specifying the Image Quality for Scanning [Image Quality Mode]

To obtain an image quality that is close to the image quality for scanning with fi-7700/fi-7600/fi-7700S, set the image quality mode.

1. **Start Software Operation Panel.**

   ➡ Starting Up Software Operation Panel (page 260)

2. **From the list, select [Device Setting 2] → [Image Quality Mode].**

3. **Select whether to obtain an image quality that is close to the image quality with fi-7700/fi-7600/fi-7700S.**
   Factory default setting: Disable

Settings for the Paper Damage Prevention Function [Low-speed Feed Mode]

Specify this to slow down the scanning speed in order to protect the documents.
When performing a scan at a low resolution (lower than 400 dpi), the scan is performed at a slow speed regardless of the resolution that is set. This setting is effective for scanning long page documents.

1. **Start Software Operation Panel.**

   ➡ Starting Up Software Operation Panel (page 260)

2. **From the list, select [Device Setting 2] → [Low-speed Feed Mode].**

3. **Select [Enable] if you perform a slow scanning speed in order to protect the documents.**
   Factory default setting: Disable

> **TIP**
>
> This setting can also be configured on the operator panel.

Specifying the Paper Ejecting Speed (Stacking Control)

This option allows you to slow down the ejecting speed when documents are ejected, preventing scanned documents from scattering.
This setting is effective when you scan documents of different sizes.

1. **Start Software Operation Panel.**

   ➡ Starting Up Software Operation Panel (page 260)

2. **From the list, select [Device Setting 2] → [Stacking Control].**

3. **Select [Enable] to prevent scanned documents from scattering.**
   Note that scanning speed is reduced because the ejecting speed is controlled so that documents are ejected more slowly.
   Factory default setting: Disable

> **TIP**
> This setting can also be configured on the operator panel.

Settings Related to the Detection for Overlapped Documents (Multifeed)

Specifying a Method to Detect Overlapped Documents [Multifeed]

Multifeed is an error that occurs when two or more sheets are overlapped and fed at once.
Configure the settings to detect overlapped documents during a scan.
Overlapped documents are detected with the ultrasonic sensor or according to the difference in length of the documents.
When overlapped documents are detected, an error message is displayed and the scan stops. If documents are overlapped within 30 mm from the leading edge, they are not detected as overlapped.

ATTENTION

When Manual Single Mode is used, document overlapping will not be detected.
Manual Single Mode is the mode for scanning a document folded in half or a multi-layered document such as an envelope. Therefore, even if the setting for detecting overlapped documents is enabled, such documents are not detected as overlapped documents.

1 Start Software Operation Panel.

➡ Starting Up Software Operation Panel (page 260)

2 From the list, select [Device Setting 2] → [Multifeed].

3 Select a detection method.

None

Does not detect overlapped documents.

Check Overlapping(Ultrasonic)

Detects overlapped documents with the ultrasonic sensor.
When this is selected, you can specify the following two options:

- Specify an area to detect overlapped documents by the length from the leading edge of the document in the feeding direction.
  For details, refer to Specifying the Area to Detect Overlapped Documents [Document check area specification for Multifeed Detection] (page 308).
- When a piece of paper is attached on a document, the length and position of the paper can be memorized, and set to ignore overlapping of documents.
  For details, refer to Configuring Not to Detect Certain Overlap Patterns (page 161).

This is the factory default setting.

Check Length

Detects overlapped documents according to the difference in length.
Select this to scan documents of the same length.

ATTENTION

Note that overlapped documents cannot be detected accurately when a mixed batch of different lengths are scanned.

Check Overlapping and Length

Detects overlapped documents by the combination of [Check Overlapping(Ultrasonic)] and [Check Length].
When this is selected, you can specify the following two options:

- Specify an area to detect overlapped documents by the length from the leading edge of the document in the feeding direction.
  For details, refer to Specifying the Area to Detect Overlapped Documents [Document check area specification for Multifeed Detection] (page 308).
- When a piece of paper is attached on a document, the length and position of the paper can be memorized, and set to ignore overlapping of documents.
  For details, refer to Configuring Not to Detect Certain Overlap Patterns (page 161).

ATTENTION

Note that overlapped documents cannot be detected accurately when a mixed batch of different lengths are scanned.

Length

Specify this item when [Check Length] or [Check Overlapping and Length] is selected.
Specify the difference in length of documents to be detected as overlapped documents.
Overlapped documents are detected when the difference in length of documents is longer than the specified value.
Any length under the specified value is tolerated as a slight error and not detected as overlapped documents.
Factory default setting: 10

ATTENTION

- To scan documents with different lengths, select [Check Overlapping(Ultrasonic)].
- When [Check Overlapping(Ultrasonic)] is selected, if an attachment such as a sticky note, receipt, or photo is attached to the document, the attached part of the document may be detected as overlapped documents.
  To disable the detection of overlapped documents, configure one of the following:
  - Select [Check Length]
  - Configure the settings so as not to detect areas where pieces of paper are attached in [Document check area specification for Multifeed Detection]
  - In [Intelligent Multifeed Function], select [Auto mode 1] or [Auto mode 2]

TIP

- Overlapped documents are not detected in the following cases:
  - When the setting for using the Carrier Sheet is enabled in the scanner driver
  - When using Manual Single Mode
- This setting can also be configured in the scanner driver.
  Note that priority is given to the scanner driver setting.

Specifying the Area to Detect Overlapped Documents [Document check area specification for Multifeed Detection]

Specify a range in which not to detect overlapped documents or a range in which to detect them. Specify this item when [Check Overlapping(Ultrasonic)] or [Check Overlapping and Length] is selected for [Multifeed].

1 Start Software Operation Panel.

➡ Starting Up Software Operation Panel (page 260)

2 From the list on the left, select [Device Setting 2] → [Document check area specification for Multifeed Detection].

3 Specify the detection range.

Select the [Selected range] check box.

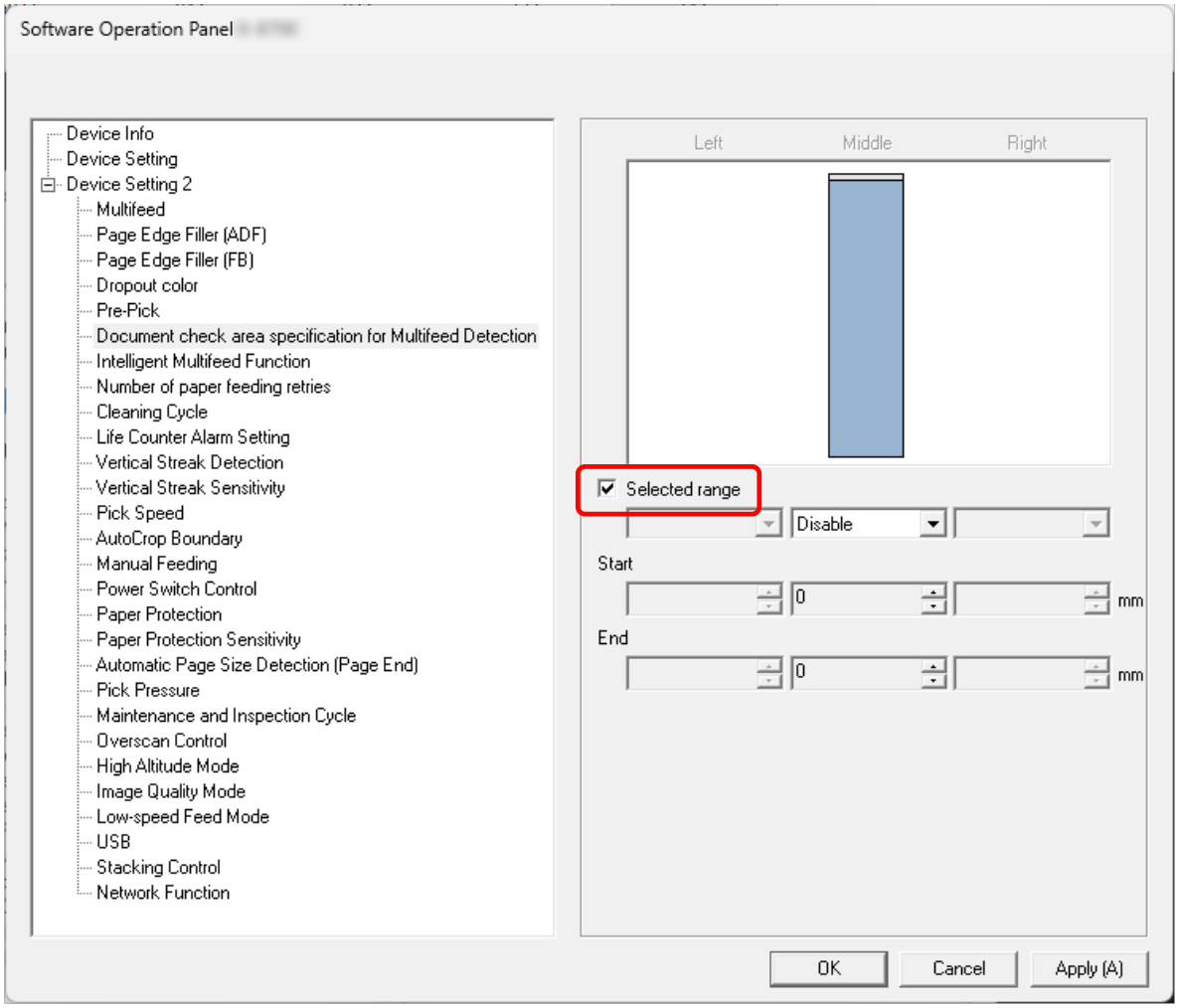

[Selected range] check box

Select the check box to specify the detection range (colored in light blue) in the figure below.

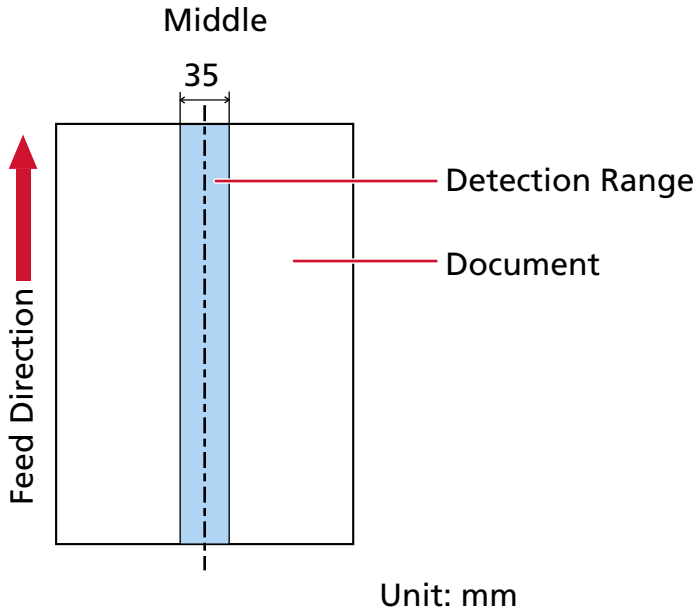

The check box is cleared for the factory default setting.
Clearing this check box sets both start and end positions to "0", and overlapped documents are detected within the whole document.
The above condition applies when the document is loaded at the center point between the pick rollers.
If documents are overlapped within 30 mm from the leading edge, they are not detected as overlapped.

Disable (Middle)

This can be selected when the [Selected range] check box is selected.
Overlapped documents are not detected within the specified area.
This is the factory default setting.

Enable (Middle)

This can be selected when the [Selected range] check box is selected.
Overlapped documents are detected within the specified area.

Start (Middle)

Specify the start position of the detection area by the length from the leading edge of the document in the feeding direction.
Range: 0 to 510 mm, in 2 mm increments, Start < End
Factory default setting: 0

End (Middle)

Specify the end position of the detection area by the length from the leading edge of the document in the feeding direction.
Range: 0 to 510 mm, in 2 mm increments, Start < End
Factory default setting: 0

TIP

- When the start and end positions are both "0", overlapped documents are detected in the whole document regardless of the setting for [Selected range].
- To disable the detection of overlapped documents for the whole document, select [Disable] for [Selected range], and set the start position to "0" and the end position to equal the document length or longer.
- If the start position is set at a length longer than the document length, overlapped documents are detected in the whole document when [Disable] is selected for [Selected range], and overlapped documents are not detected anywhere in the whole document when [Enable] is selected for [Selected range].
- To detect overlapped documents, the area must be at least 5 mm in length.
  Configure the setting so that the value of the end position minus the start position is 6 mm or more.
- You can also set the start position and the end position by the following methods:
  - On the window for specifying the detection area, draw a square by dragging the mouse pointer.
  - On the window for specifying the detection area, drag the handles that indicate the start position and the end position.
- For examples of the overlapping detection area settings, refer to Examples of the Settings for the Area to Detect the Overlapping of Documents (page 311).

■ Examples of the Settings for the Area to Detect the Overlapping of Documents

Example 1

Setting details are as follows.
Detection area: Specify the enabled area, Start: 50 mm, End: 200 mm

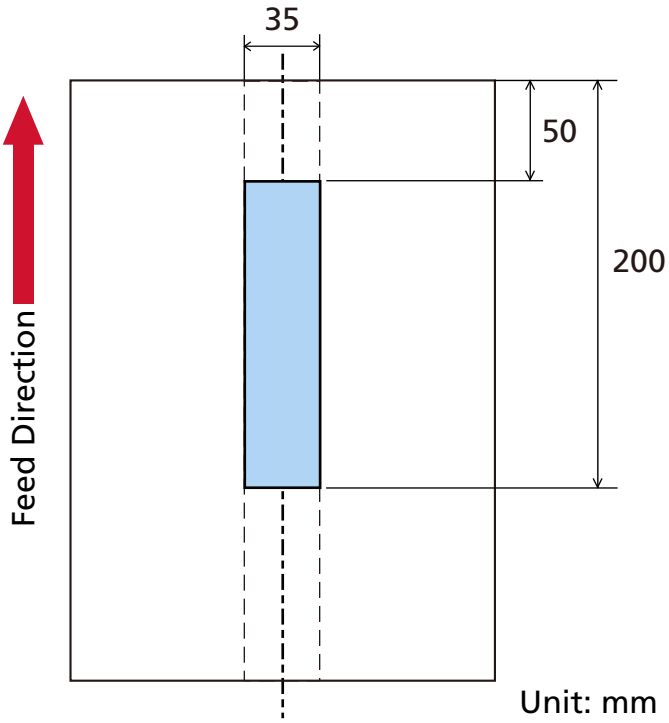

Overlapping of documents is detected only within the light blue area.

Example 2

Setting details are as follows.

Detection area: Specify the disabled area, Start: 0 mm, End: 300 mm

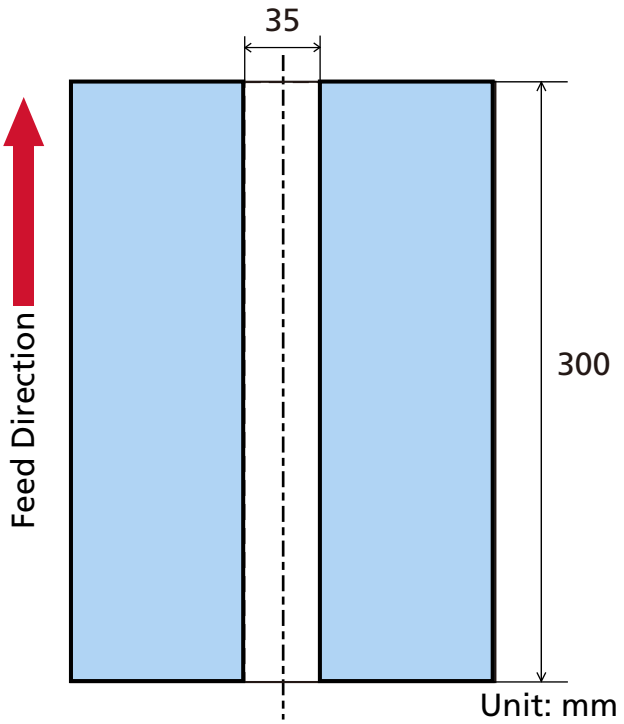

Overlapping of documents is detected only within the light blue area.

Example 3 (Bad Example)

Setting details are as follows.
Detection area: Specify the enabled area, Start: 100 mm, End: 102 mm

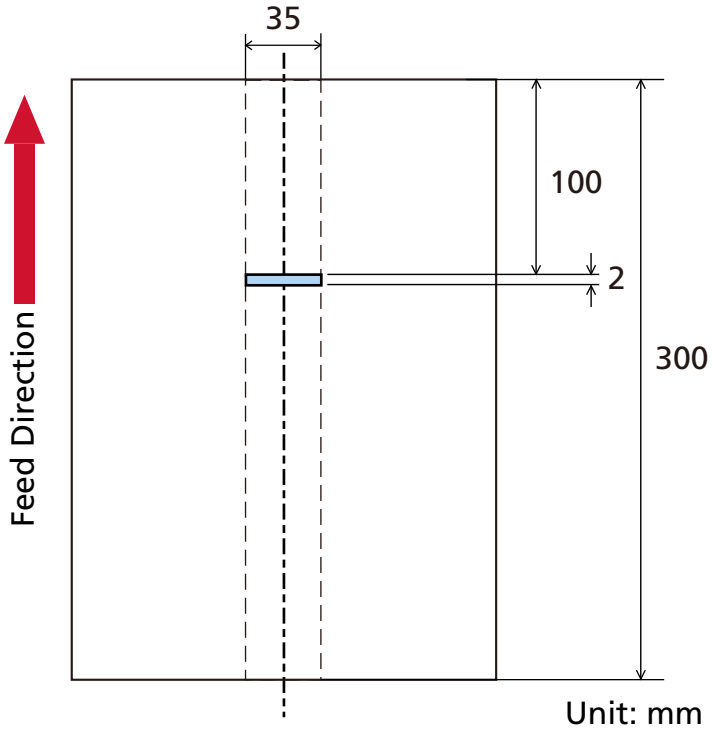

Since the detection area (length) is less than 5 mm, overlapped documents cannot be detected accurately.

Setting to Ignore Certain Overlap Patterns [Intelligent Multifeed Function]

Configure the setting to automatically ignore certain patterns of overlapped documents when the setting to detect overlapped documents is enabled.
Note that you first need to specify [Check Overlapping(Ultrasonic)] or [Check Overlapping and Length] in the scanner driver and in Software Operation Panel (Specifying a Method to Detect Overlapped Documents [Multifeed] (page 305)) before setting this item.

1 Start Software Operation Panel.

➡ Starting Up Software Operation Panel (page 260)

2 From the list on the left, select [Device Setting 2] → [Intelligent Multifeed Function].

3 Select an operation mode.

Manual mode

Specify whether overlapped documents are detected when re-scanning documents detected as overlapped documents.
Does not memorize the size or location of the paper attachment.
Scanning will stop immediately if overlapped documents are detected.
Note that if the setting for stopping the scan to check images is set to on in the scanner driver, scanning will stop after overlapped documents are ejected.
This is the factory default setting.

Auto mode 1

Specify whether the length and position of a piece of paper attached on a document detected as overlapped documents are memorized as an overlap pattern.
If the overlap pattern is memorized, documents with the same overlap pattern are not detected as overlapped documents from the next scan.
Scanning will stop after the overlapped documents are ejected.
Overlap patterns can be memorized for up to eight sheets (up to four overlap patterns can be memorized per sheet).
Once overlap patterns have been memorized for eight sheets, the memorized patterns will be overwritten by any newly detected patterns starting from the first sheet that was memorized.
However, when the scanner is turned off and on, the number of memorized overlap patterns depends on the setting for [Overlap patterns at power-off] in Software Operation Panel.

➡ Setting to Ignore Certain Overlap Patterns [Intelligent Multifeed Function] (page 314)

TIP

If you want the scanner to memorize five or more overlap patterns for a document, scan the document once for the scanner to memorize up to four overlap patterns, then scan the document again for the scanner to memorize the fifth and subsequent overlap patterns so that the newly memorized overlap patterns will not be detected as overlapping from the next scan.

Because the same document is scanned twice, the scanner effectively memorizes it as two documents.

Auto mode 2

Specify whether the length of the longest piece of paper attached on a document detected as overlapped documents is memorized as an overlap pattern.
If the overlap pattern is memorized, a document with a piece of paper in the same length or shorter attached is not detected as overlapped documents from the next scan.
Scanning will stop after the overlapped documents are ejected.
Only one overlap pattern can be memorized in this operation mode.

[Clear overlap pattern] check box

Select this to erase the overlap patterns that were memorized in Auto mode.
By selecting this, you can erase the overlap patterns that were memorized in Auto mode.
You can erase overlap patterns that were not supposed to be memorized, but be careful with this operation because all memorized patterns will be erased.
The check box is cleared for the factory default setting.

[Memorize overlap pattern] check box

For Auto mode 1 or Auto mode 2, manually switch whether or not to memorize an overlap pattern when overlapped documents are detected.
Select this to change the default setting to enable in order to memorize the overlap pattern when overlapped documents are detected.
The check box is cleared for the factory default setting.
For details about the function that memorizes an overlap pattern, refer to Configuring Not to Detect Certain Overlap Patterns (page 161).

Overlap patterns at power-off

You can specify whether or not to keep the overlap pattern upon turning the power off.
When [Remember] is selected, the most recent overlap patterns (for eight documents) memorized for Auto mode 1 and one overlap pattern for Auto mode 2 can be used the next time the scanner is powered on.
Factory default setting: Do not remember

TIP

This setting can also be configured on the operator panel.

Settings Related to Waiting Time

Waiting Time for the Scanner to Enter Power Saving Mode [Power saving]

Specify the waiting time before the scanner enters power saving mode.

1 Start Software Operation Panel.

➡ Starting Up Software Operation Panel (page 260)

2 From the list, select [Device Setting].

3 Specify the waiting time for the scanner to enter power saving mode.

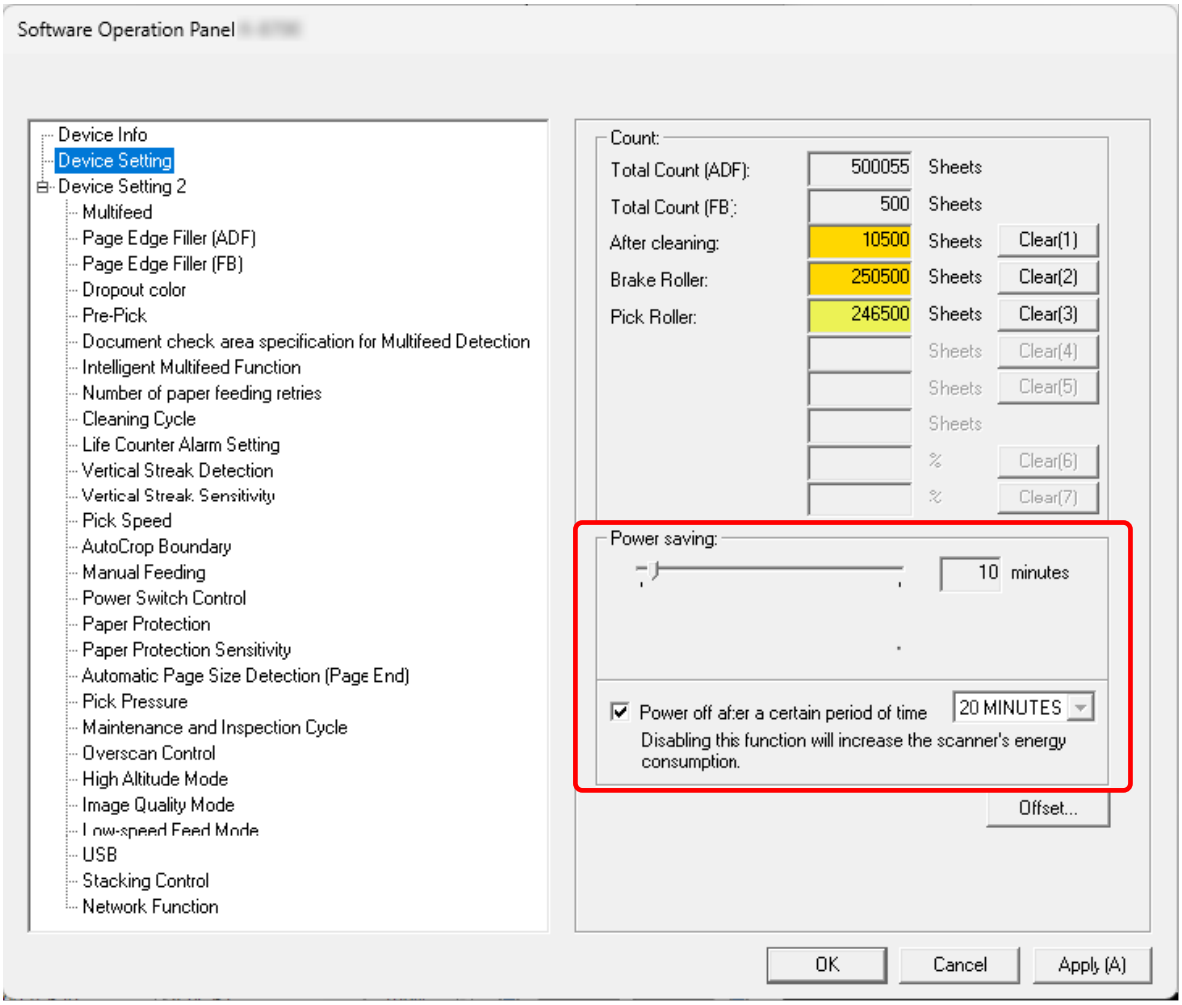

Power saving

Use the slider to specify the waiting time before entering power saving mode in the range from 5 to 115 minutes (in increments of 5).
Factory default setting: 10

[Power off after a certain period of time] check box

Select this when you turn off the scanner automatically.
When this is selected, the scanner is turned off automatically if it is left on without being used for a certain period of time.
The check box is selected for the factory default setting.
Select a time for the scanner to turn off automatically from the drop-down list.
Factory default setting: 20 minutes

TIP

- When the [Power off after a certain period of time] check box is cleared, the scanner's energy consumption will increase.
- This setting can also be configured on the operator panel.

Waiting Time in Manual Feeding [Manual Feeding]

Specify this to continue loading and scanning documents repeatedly after starting scanning.
To configure the scanner to wait for a document to be loaded onto the ADF paper chute (feeder) for a specified waiting time after scanning is started or document feeding is complete, specify the waiting time.
This enables continuous scanning as long as you load a document within the specified waiting time.
If the specified waiting time is exceeded, the scan is finished automatically.

1 **Start Software Operation Panel.**

➡ Starting Up Software Operation Panel (page 260)

2 **From the list on the left, select [Device Setting 2] → [Manual Feeding].**

3 **Set [Timeout Time].**
For [Timeout Time], specify the time period until which the scanner confirms that no documents are loaded in the ADF paper chute (feeder) (the interval between the last scan and the detection of whether the next document is loaded or not).
Factory default setting: 10 seconds

- When scanning more than one document in succession manually

  a Select [Enable] for [Continuous Feed Mode] to switch to Manual Continuous Mode.
  Factory default setting: Disable

  b Select the time for [Timeout Time].

- When scanning a document folded in half, an envelope, or a multi-layered transfer paper one at a time manually

  a Slide the feed mode switch to the left to enable Manual Single Mode.

  b Select the time for [Timeout Time].

TIP

- In Manual Continuous Mode or Manual Single Mode, the scanner will wait for documents to be loaded in the ADF paper chute (feeder) until the timeout time elapses after scanning is started or a document is ejected.
  Scanning will finish if no document is loaded within the timeout time.
  To immediately end a scan, press the [Scan/Enter] button or the [Stop/Clear] button.
  Note that scanning cannot be canceled even if you press the [Stop/Clear] button while a document is being fed.
- This setting can also be configured on the operator panel.

Settings Related to the Connection Between the Scanner and Computer

Specifying the USB Operation [USB]

Change the USB setting if an error occurred on a computer during communication.
This setting cannot be configured when the scanner is connected via a wired LAN.
If this setting is changed, the scanner is restarted.

1. **Start Software Operation Panel.**

   ➡ Starting Up Software Operation Panel (page 260)

2. **From the list on the left, select [Device Setting 2] → [USB].**

3. **Specify how the USB function operates.**

   Auto

   Operates in accordance with the connection environment. This is the factory default setting.

   USB 2.0

   Operates with USB 2.0.

> **TIP**
>
> This setting can also be configured on the operator panel.

Settings to Use the Scanner Only via the USB Connection [Network Function]

With the factory default settings, you can use the scanner either via a USB connection or a wired LAN connection.
Disable the wired LAN connection if you want to use the scanner only via a USB connection for the following reasons.

- To reduce power consumption
- To enhance security
- To use Enable USB power feeding

➡ Method for Turning the Scanner ON/OFF [Power Switch Control] (page 321)

This setting cannot be configured when the scanner is connected via a wired LAN.
If this setting is changed, the scanner is restarted.

1. **Start Software Operation Panel.**

   ➡ Starting Up Software Operation Panel (page 260)

2. **From the list on the left, select [Device Setting 2] → [Network Function].**
   [Network Function] appears when the scanner is connected via USB cable.

3. **Select [Disable].**
   Factory default setting: Enable

Settings Related to Power On/Off and the Power Consumption of the Scanner

Method for Turning the Scanner ON/OFF [Power Switch Control]

Configure the settings for turning the scanner's power on and off.
Specify the method for turning on/off the scanner, other than by using the [Power] button on the scanner.

1 Start Software Operation Panel.

➡ Starting Up Software Operation Panel (page 260)

2 From the list, select [Device Setting 2] → [Power Switch Control].

3 Select a method for turning on/off the scanner from the following.

Enable power switch

The [Power] button on the scanner is used to turn on/off the scanner.
This is the factory default setting.

Disable power switch

Select this to use an AC power strip to control power supply for peripherals such as a scanner in accordance with the computer's power.
The [Power] button on the scanner is not used to turn on/off the scanner.

> **ATTENTION**
> [Power off after a certain period of time] under [Device Setting] in Software Operation Panel will be disabled.

Enable USB power feeding

This setting goes into effect when [Network Function] in [Device Setting 2] is set to [Disable] in Software Operation Panel.
Set whether to allow the scanner to be turned on or off by the following actions in addition to pressing the [Power] button on the scanner.

- Turning the computer on or off
- Connecting or disconnecting the USB cable

> **ATTENTION**
> - If [Enable USB power feeding] is selected, the power switch is always be enabled.
> - Some types of computers and USB hubs keep supplying power to the USB bus even after the computer is turned off.
>   In that case, [Enable USB power feeding] may not work properly.

TIP

When [Disable power switch] is set, the scanner's energy consumption will increase.

Settings Related to Scanner Maintenance

Detecting Vertical Streaks [Vertical Streak Detection]

You can configure the settings for detecting dirt on the glass.
Vertical streaks may appear on images if the glass is dirty.
When [Enable] is selected for the vertical streak detection setting, a message is displayed at the following times if vertical streaks may appear on the image that you scanned with the ADF:

- When the ADF is opened or closed
- When scanning is finished
- When a document is loaded in the ADF paper chute (feeder)
- When the scanner wakes up from power saving mode

A message appears as follows.

- Menu flashes on the LCD.
  [Clean glass!] also flashes on the second line in the [Ready] screen.
  To prevent vertical streaks from appearing on images, check the information and then clean the glass.
  For details about how to check the information, refer to Checking the Information (page 115).
- A message is displayed in Error Recovery Guide on the computer connected to the scanner.
  To prevent vertical streaks from appearing on images, check the message and then clean the glass.

For details about cleaning, refer to Daily Care (page 168).

1. **Start Software Operation Panel.**
   ➡ Starting Up Software Operation Panel (page 260)
2. **From the list on the left, select [Device Setting 2] → [Vertical Streak Detection].**
3. **Select [Enable].**
   Factory default setting: Disable

> **TIP**
>
> - The function to receive notifications about dirt on the glass does not necessarily notify you of all the dirt. If vertical streaks appear on the image, take measures according to Vertical Streaks Appear on the Images (page 247).
> - This setting can also be configured on the operator panel.

Specifying the Sensitivity Level for Vertical Streak Detection [Vertical Streak Sensitivity]

Specify the sensitivity level to detect vertical streaks (dirt on the glass) when [Enable] is selected for [Vertical Streak Detection].
Adjust the sensitivity level according to how dirty the glass is.

1 Start Software Operation Panel.

➡ Starting Up Software Operation Panel (page 260)

2 From the list on the left, select [Device Setting 2] → [Vertical Streak Sensitivity].

3 Select the sensitivity level to detect dirt on the glass.

Low

Decreases the sensitivity level to detect dirt on the glass.
Specify this to detect dirt only when the glass is very dirty.

Normal

Detects dirt on the glass at the optimum sensitivity level.
This is the factory default setting.

High

Increases the sensitivity level to detect dirt on the glass.
Specify this to detect dirt even when the glass is slightly dirty.

TIP

- If [Clean glass!] frequently flashes on the second line in the [Ready] screen, select [Low].
- This setting can also be configured on the operator panel.

Setting the Maintenance/Inspection Cycles for the Scanner [Maintenance and Inspection Cycle]

Specify the maintenance and inspection cycle for the scanner that is performed by a service engineer.

If the specified period has passed after the last maintenance and inspection date, Menu flashes on the LCD.
[maintenance] also flashes on the second line in the [Ready] screen.
Check the information and ask a service engineer to perform regular maintenance and inspection for the scanner.
For details about how to check the information, refer to Checking the Information (page 115).
For regular maintenance and inspection on the scanner by a service engineer, contact the distributor/dealer where you purchased this product.

1. **Start Software Operation Panel.**

   ➡ Starting Up Software Operation Panel (page 260)

2. **From the list on the left, select [Device Setting 2] → [Maintenance and Inspection Cycle].**

3. **Select [Enable] to receive a message on the LCD when it gets closer to the time for maintenance.**
   Factory default setting: Disable

4. **Select the cycle to receive a message.**
   Factory default setting: 12 months

Network Settings (fi Series Network Settings)

This section explains how to use fi Series Network Settings to configure the network settings.
The network settings for the scanner can be configured with a browser on the computer by using fi Series Network Settings.

Starting Up fi Series Network Settings

1 Connect the scanner to the computer as follows.

- fi-8600

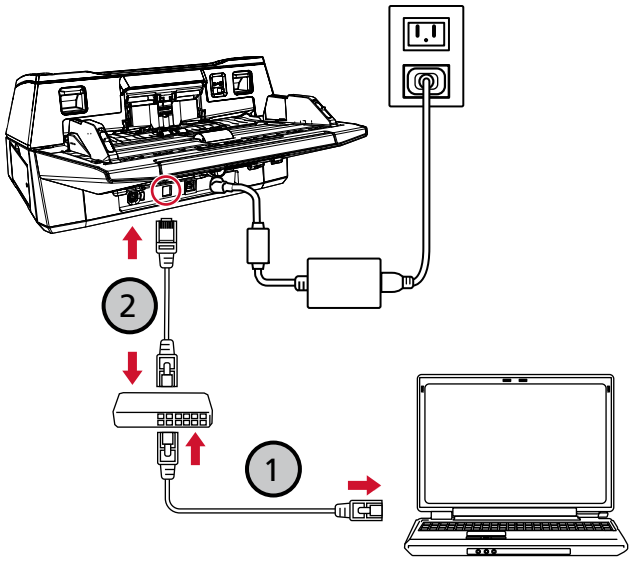

- fi-8700/fi-8700S

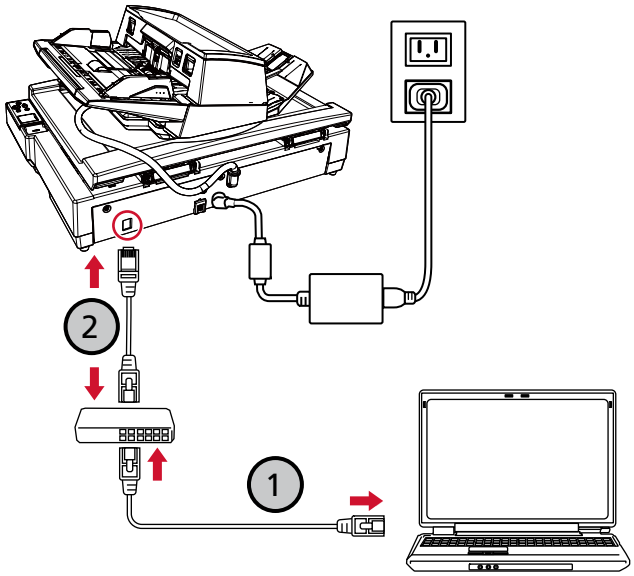

a **Connect the computer to a network device via a wired LAN (①).**

For details about how to connect the computer to the network, refer to your computer manual.

b **Connect the scanner to the network device via a wired LAN (②).**

2 **Check the IP address of the scanner.**

You can use IP Address Setting Tool to check the IP address.
For details, refer to the Network Setup Tool Help.
For details about how to start up IP Address Setting Tool, refer to Starting Up IP Address Setting Tool (page 354).

3 **Make sure that the scanner is connected to the network.**

➡ How to Check the Network Connection for the Scanner (page 349)

4 **Start a browser on the computer and enter the following URL in the URL input field to connect to the scanner.**

IP address or FQDN of the scanner

Example

IPv4 address
xxx.xxx.xxx.xxx/(each "xxx" is a value from 0 to 255)

Example

For an IPv6 address
[xxxx:xxxx:xxxx:xxxx:xxxx:xxxx:xxxx:xxxx]/(each "xxxx" is a value from 0 to ffff)

5 **Enter the administrator password, and click the [Login] button.**

For details about the administrator password, refer to Admin Password (page 336).
The fi Series Network Settings window appears.

6 **Click each menu to configure the settings.**

➡ Scanner Information (page 331)
➡ Network (page 332)
➡ Security (page 335)

➡ Maintenance (page 336)

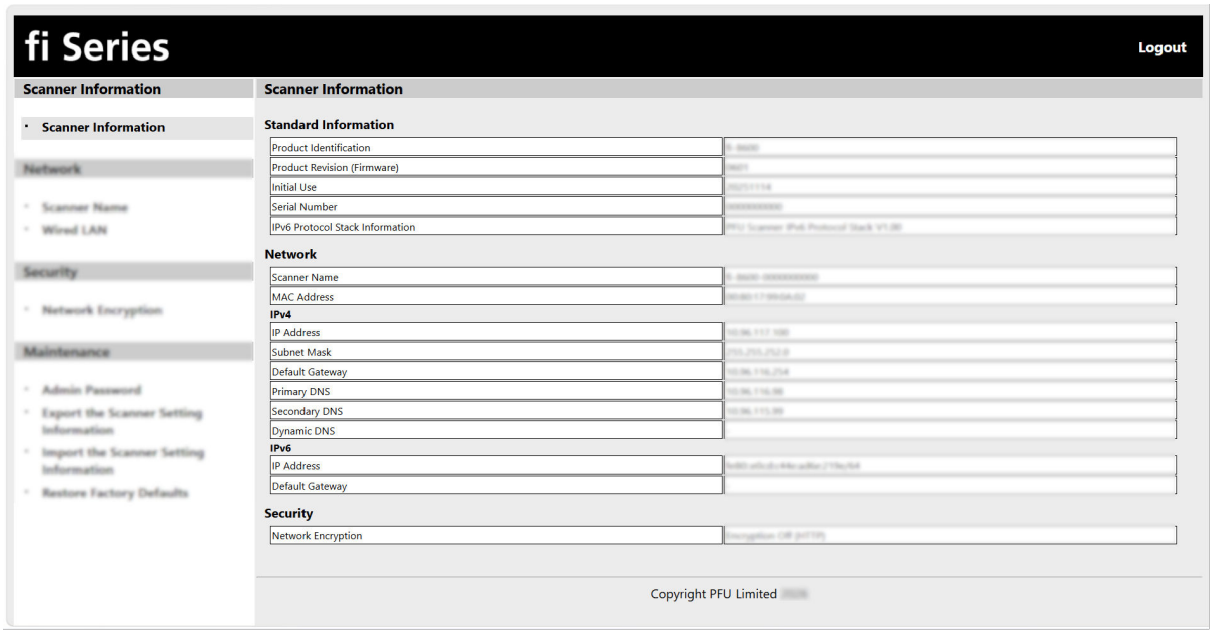

ATTENTION

To be able to use the function on the window without any problems, make sure that the following settings are configured on your browser.

- Cookies are enabled
- JavaScript is enabled

Setting Items

This section shows a list of setting items that you can configure in the fi Series Network Settings window.

ATTENTION

To use fi Series Network Settings, an administrator password is required.
You can check the default administrator password on the label.
For details about the label, refer to Checking the Product Labels (page 258).
Change the administrator password to prevent the settings from being changed by other users.
Also, change the administrator password regularly.
The administrator password can be configured in [Admin Password] under [Maintenance].

- **Scanner Information**

Setting Item	Description
Scanner Information (page 331)	Information about the scanner unit and its settings is displayed.

- **Network**

Setting Item	Description
Scanner name (page 332)	Set a scanner name.
Wired LAN (page 333)	Set an IPv4 address or IPv6 address for the scanner. **ATTENTION** The following settings do not support IPv6: ● DNS Server ● [Enable Dynamic DNS] check box

- **Security**

Setting Item	Description
Network Encryption (page 335)	Specify whether to encrypt network communications.

- **Maintenance**

Setting Item	Description
Admin Password (page 336)	Change the administrator password.

Setting Item	Description
Export the Scanner Setting Information (page 337)	Export the scanner settings to a file.
Import the Scanner Setting Information (page 338)	Import the scanner settings.
Restore Factory Defaults (page 339)	Restore the scanner settings to the factory default.
License (page 340)	Displays the license information.

Scanner Information

Scanner Information

Information about the scanner unit and its settings is displayed.
Click [Scanner Information] → [Scanner Information] to display the window.

Network

Scanner name

Set a scanner name.
Click [Network] → [Scanner name] to display the window.

Scanner name

Enter a scanner name within 64 characters.
The following characters can be used for a scanner name:

- Alphanumerical characters
- Space
  The space before or after the character string is ignored.
- Symbols
  -_

Factory default setting: [fi-8600, fi-8700, or fi-8700S]-[*ScannerSerialNumber*]

[Apply to the scanner] button

Applies the configured settings.

TIP

- The scanner serial number can be checked on the product label.

  ➡ Checking the Product Labels (page 258)

- When the [Enable Dynamic DNS] check box is selected, enter a scanner name within 63 characters.
  For details about Dynamic DNS, refer to Wired LAN (page 333).
  It is also recommended that you do not use the following characters for the scanner name as they are replaced with "-" when the name is registered in the DNS servers.

  - Underscore "_"
  - Space

Wired LAN

Set an IPv4 address or IPv6 address for the scanner.
Click [Network] → [Wired LAN] to display the window.

IPv4 Configuration

Set an IPv4 address of the scanner.
Factory default setting: Auto
When [Manual] is selected, specify the following items:

- IP Address
- Subnet Mask
- Default Gateway

DNS Server

Configure the DNS servers.
Factory default setting: Auto
When [Manual] is selected, specify the following items:

- Primary DNS
- Secondary DNS

> **ATTENTION**
> Note that an IPv6 address is not supported.

IPv6 Configuration

Set an IPv6 address of the scanner.
Factory default setting: Auto
When [Manual] is selected, specify the following items:

- [Receive RA packet] check box
  Select the check box to enable an IPv6 address that has been generated automatically.
  You can check an IPv6 address that has been generated automatically in the [Scanner Information] window.
  The check box is selected for the factory default setting.
- IP Address

> **ATTENTION**
> The following IPv6 addresses cannot be set manually.
> - Loopback address
> - Link-local address
> - Site-local address
> - Multicast address

- IPv4-compatible address
- IPv4-mapped address
- Address beginning with 2001:0000
- Address beginning with 2002
- Address beginning with 3FFE

- Subnet prefix length
- Default Gateway

[Enable Dynamic DNS] check box

Set this item to obtain an IP address of the scanner automatically.
The check box is cleared for the factory default setting.
When the check box is selected and a scanner is connected to a network, a scanner name (host name) and an IP address will be automatically registered in the DNS servers.
You can specify the scanner name (host name) to be registered with the DNS server in [Scanner name].

➡ Scanner name (page 332)

TIP

- The primary DNS server needs to be set.
  The secondary DNS server is not supported.
- If you enter a blank space or "_" for [Scanner name], it is converted to "-" and registered in the DNS server.
  Note that host names registered with the DNS servers can be up to 63 characters long.

ATTENTION

Note that an IPv6 address is not supported.

When the scanner name (host name) is registered with the DNS servers, you can search for the scanner by specifying the scanner name (host name) in Scanner Selection Tool, even if the IP address assigned by the DHCP server has changed.
For details about searching for a scanner, refer to the Network Setup Tool Help.
For details about how to start up Scanner Selection Tool, refer to Starting Up Scanner Selection Tool (page 353).

[Apply to the scanner] button

Applies the configured settings.

Security

Network Encryption

Specify whether to encrypt network communications.
Click [Security] → [Network Encryption] to display the window.
Factory default setting: Encryption Off (HTTP)

Encryption Off (HTTP)

This is a transmission method prioritizing the scanning speed.

Encryption On (HTTPS)

This is a transmission method prioritizing the security. The scanning speed is slow with this setting.

[Apply to the scanner] button

Applies the configured settings.

Maintenance

Admin Password

Change the administrator password.
Change the administrator password to prevent the settings from being changed by other users.
Change the administrator password regularly.
Click [Maintenance] → [Admin Password] to display the window.

Current Password

Enter the current password.
You can check the default administrator password on the label.
For details about the label, refer to Checking the Product Labels (page 258).

New Password

Enter a new password within 16 characters to change the current password.
The following characters can be used for a new password:

- Alphanumerical characters
- Space
- Symbols

  -/:;()\&@".,?!'#%^*+=_|~<>$[]`{}

- Diacritics

  èéêëÈÉÊËùúûüÙÚÛÜìíîïÌÍÎÏòóôõöœÒÓÔÕÖŒàáâãäæÀÁÂÃÄÆşŞğĞçÇ
  ßñÑ

Spaces before and after the character string are maintained.

Confirm New Password

Re-enter the password entered for [New Password] to change the current password.

[Display Keystrokes] check box

Select the check box to display the password characters.
The check box is cleared for the factory default setting.

[Apply to the scanner] button

Applies the configured settings.

Export the Scanner Setting Information

Export the scanner settings to a file.
Click [Maintenance] → [Export the Scanner Setting Information] to display the window.
You can use the scanner settings in the following ways:

- Importing the settings to another scanner to apply them

Version/Name

Enter a version or name within 31 characters to identify the scanner settings.
[Version/Name] will be used for the name of the file.
The following characters cannot be used:

- Symbols

  " */:<>?\|~

[Export] button

Exports the scanner settings to a file.
The file will be output with a character string you entered for [Version/Name].
Example: ScannerSettings_[Version/Name].cab

See also

Notes When Exporting the Scanner Settings (page 352)

Import the Scanner Setting Information

Import the scanner settings.
Click [Maintenance] → [Import the Scanner Setting Information] to display the window.

[Select a file] button

Select the file output in Export the Scanner Setting Information (page 337).

[Import] button

This is available when a file is selected.
Imports the scanner settings.
The scanner is restarted.

Restore Factory Defaults

Restore the scanner settings to the factory default.
Click [Maintenance] → [Restore Factory Defaults] to display the window.

[Restore Factory Defaults] button

Restores the factory defaults.
The scanner is restarted.

License

Displays the license information.
Click [Maintenance] → [License] to display the window.

Appendix

Basic Specification

Item		Specification
Scanner type		• fi-8600 ADF (Automatic Document Feeder) Manual feeding (Single/Continuous) is available with the ADF. • fi-8700/fi-8700S ADF (Automatic Document Feeder) + Flatbed Manual feeding (Single/Continuous) is available with the ADF.
Image sensor		• fi-8600 Color CCD × 2 (front, back) • fi-8700 Color CCD × 3 (front, back, flatbed) • fi-8700S Color CCD × 2 (front, flatbed)
Light source		• fi-8600 White LED × 4 (front, back) • fi-8700 White LED × 6 (front, back, flatbed) • fi-8700S White LED × 4 (front, flatbed)
Scanning area (width × length)	Minimum size	50.8 × 69 mm (2 × 2.72 in.)
	Maximum size (*1)	• fi-8600 ADF: 304.8 × 431.8 mm (12.0 × 17.0 in.) • fi-8700/fi-8700S ADF: 304.8 × 431.8 mm (12.0 × 17.0 in.) Flatbed: 304.8 × 457.2 mm (12.0 × 18.0 in.)
Paper weight (thickness) (*2)		20 to 413 g/m^2 (5.3 to 110 lb) 27 to 413 g/m^2 (7.2 to 110 lb) for the size larger than A4/Letter 128 to 209 g/m^2 (34 to 56 lb) for A8 size 1.4 mm or less for plastic cards (Embossed cards allowed (ISO7810 ID-1 type compliant)) (*3)

Item		Specification
ADF Scanning speed (A4, Landscape, 300 dpi) (*4)	Binary (black & white)	• fi-8600/fi-8700 Simplex 100 ppm, Duplex 200 ipm • fi-8700S Simplex 75 ppm
	Grayscale	
	Color	
Flatbed Scanning speed (A4, Portrait, 300 dpi) (*4)	Binary (black & white)	• fi-8700/fi-8700S 0.9 sec./sheet
	Grayscale	
	Color	
Loading capacity (*5)		• A4/Letter size documents or smaller 300 sheets (with paper weight of 80 g/m^2 [20 lb] and thickness of the document stack under 30 mm) • Documents larger than A4/Letter size 100 sheets (with paper weight of 80 g/m^2 [20 lb] and thickness of the document stack under 10 mm)
Optical resolution		600 dpi
Output resolution	Binary (black & white)	50 to 600 dpi (configurable in 1 dpi increments) 1,200 dpi can be set from the scanner driver
	Grayscale	
	Color	
Multi-valued level		Color: 24-bit Grayscale: 8-bit Binary (black & white): 1-bit
Grayscale level		4,096 gradation levels (12-bit)
Interface	USB	USB3.2 Gen 1x1/USB3.0/USB2.0/USB1.1(*6) Type B
	Wired LAN	IEEE802.3 Ethernet 10BASE-T/100BASE-TX/1000BASE-T RJ-45type8-pole connector
Network protocol (wired LAN)		TCP/IP (IPv4/IPv6), DHCP, HTTP/HTTPS (*7), DNS, DDNS, UDP
LCD		Display: Color Displayed dots: 16 Displayed lines: 7 × 16 (row × character)

***1:**For details about the maximum size, refer to Paper Size (page 83).

***2:**Values measured when the ADF is used. There is no paper weight limit when a document is scanned with the flatbed.

***3:**For details about plastic cards, refer to Notes on plastic cards (page 86).

***4:**Note that this is the hardware limitation, and the software's processing time such as data transfer time is added to the actual time of scanning.
The scanning speed is the same when the scanner is connected via a USB or via a wired LAN.
The measurement environment for scanning speed is as follows:

Operating system	Windows 11
CPU	Intel® Core™ i3-13100, up to 4.5 GHz
Memory	8 GB
Storage	SSD

***5:**The capacity varies depending on the paper weight.

➡ Loading Capacity (page 88)

***6:**Use the USB cable that is supplied.
When connecting the USB cable to a USB hub, make sure you connect it to a USB hub that is connected to the USB port of a computer.
Connection with USB 3.2 Gen 1x1/USB 3.0/USB 2.0/USB 1.1 requires the USB port and the hub to support USB 3.2 Gen 1x1/USB 3.0/USB 2.0.
Also note that the scanning speed slows down when USB 1.1 is used.

***7:**TLS 1.2/TLS 1.3 is supported.

Installation Specification

Item		Specification
Outer dimensions (W × D × H) (*1)		● fi-8600 236 × 432 × 214 mm/9.29 × 17.01 × 8.43 in.(*2) ● fi-8700/fi-8700S 706 × 500 × 345 mm/27.80 × 19.69 × 13.58 in.
Installation space (W × D × H) (*3)		● fi-8600 1,220 × 614 × 395 mm/48.03 × 24.17 × 15.55 in. ● fi-8700/fi-8700S 1,285 × 815 × 704 mm/50.59 × 32.09 × 27.72 in.
Weight		● fi-8600 11 kg (24.26 lb) ● fi-8700/fi-8700S 35 kg (77.18 lb)
Input power	Voltage range	AC 100 to 240 V ±10%
	Phase	Single phase
	Frequency range	50/60 Hz ±3 Hz
Power consumption	Operating	55 W or less
	Power saving	For wired LAN connection: 2.6 W or less For USB connection: 1.7 W or less
	Power off	0.3 W or less
Ambient conditions	Temperature	Operating: 5 to 35℃ (41 to 95°F) Not operating: -20 to 60℃ (-4 to 140°F)
	Humidity	Operating: 15 to 80% Not operating: 8 to 95%
Calorific value	Operating	47.3 kcal/h or less
	Power saving	For wired LAN connection: 2.3 kcal/h or less For USB connection: 1.5 kcal/h or less
	Power off	0.3 kcal/h or less

Item	Specification
Shipping weight (*4)	● fi-8600 15 kg (33.08 lb) ● fi-8700/fi-8700S 44 kg (97.02 lb)
Support period	5 years

***1:**The depth and height indicate the size of the scanner without the ADF paper chute (feeder) and the stacker. Protruding parts on the scanner are not included in the size.

***2:**The depth indicates the size of the scanner with the operator panels fitted into the sides.

***3:**The required installation space is a reference for scanning A3 size documents.

***4:**Includes the package weight.

Outer Dimensions

The outer dimensions are as follows:

- **fi-8600**

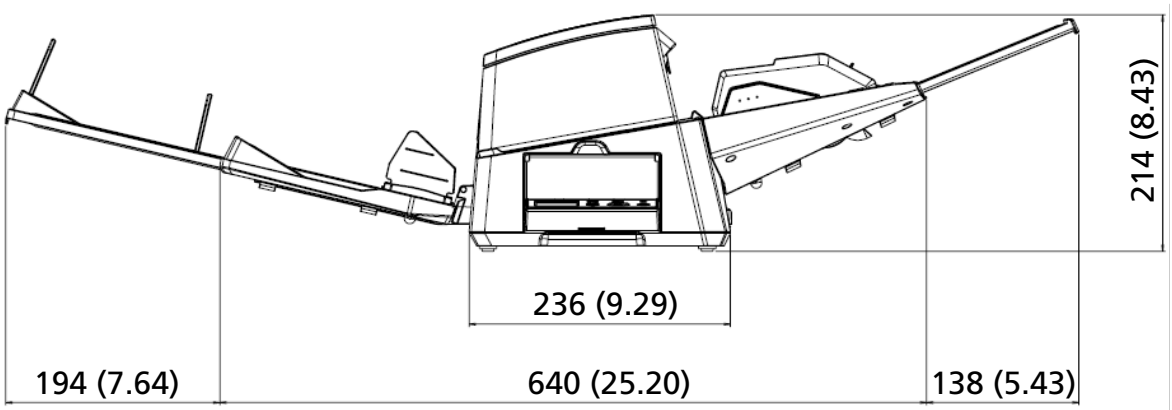

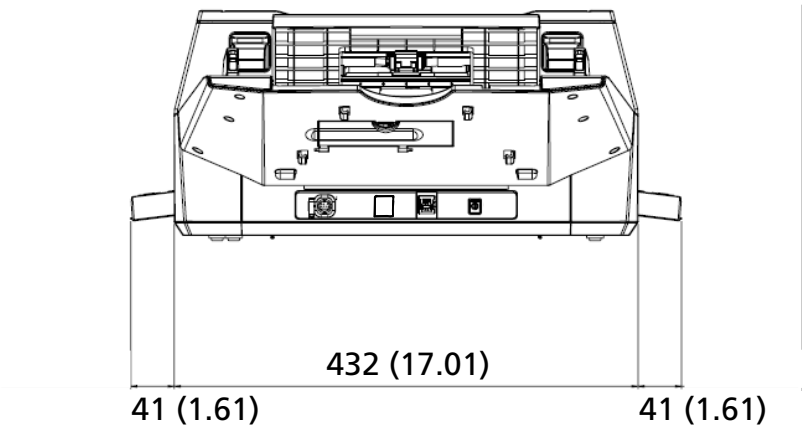

Unit: mm (in.)

- **fi-8700/fi-8700S**

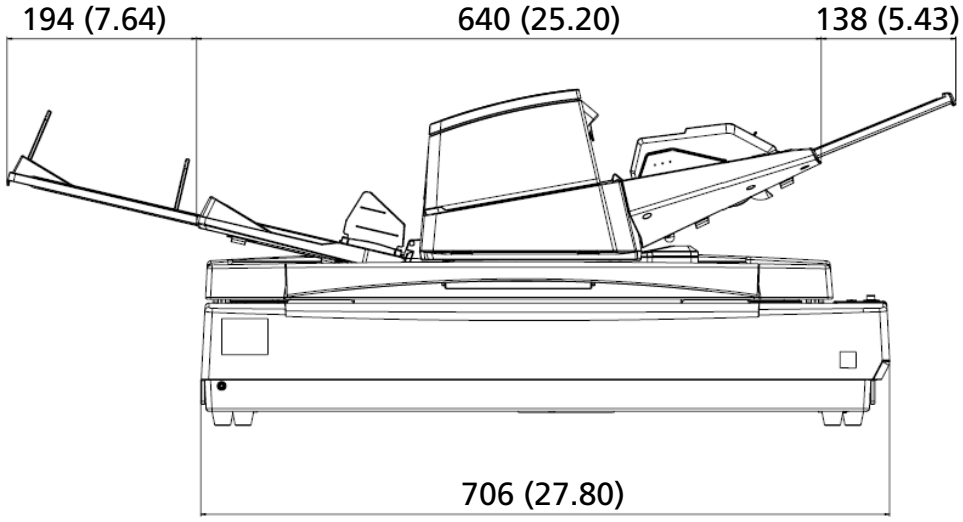

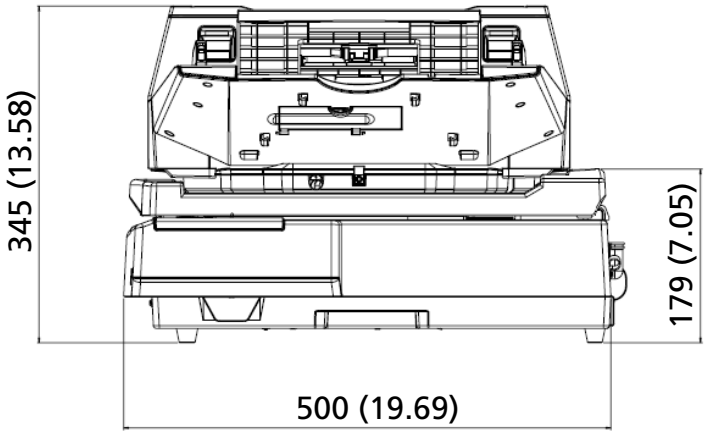

Unit: mm (in.)

Scanner Options

Name	Part No.	Supported Model	Description
fi-760PRB	PA03740-D101	fi-8600	fi-760PRB is an option that can print text (e.g. alphabets, numbers) on the back of the document after scanning. You can organize your documents by printing a name, date, or serial number on the back side of the scanned document. For details, refer to the fi-760PRB Imprinter Operator's Guide.
fi-575BK	PA03338-D960	fi-8700/fi-8700S	A black document pad that makes the background black when scanning with the flatbed. This pad is used as a replacement for the standard white document pad. Use this pad for the following types of scanning: ● To crop an image to the same size as the document (white) ● To scan multiple documents (white) at once and crop each document as a separate image
Carrier Sheets 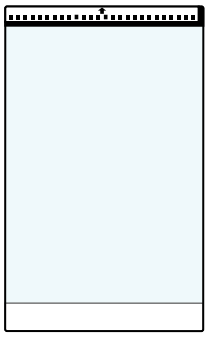	PA03360-0013	All models	Carrier Sheets: These are sheets that are used to feed documents without damaging them. The Carrier Sheet enables you to scan documents larger than A4/Letter size (for example, A3 or B4 size) and documents such as clippings without damaging them. The Carrier Sheet should be replaced approximately every 500 scans. However, replace it if damage or dirt is noticeable.

For details about purchasing the scanner options and more information, contact the distributor/ dealer where you purchased this product.

How to Check the Network Connection for the Scanner

Check the network connection status when the scanner is connected to a network via a wired LAN. Start up the command prompt on your computer, then check the status of the connection between the computer and scanner using the PING command.

1. Open the command prompt on the computer.
2. When using the PING command, enter the scanner's IP address or host name.

   ATTENTION

   When entering a host name, the following settings are required in advance:

   - Configuring the DNS server settings
   - Registering the scanner name (host name) with the DNS server

   ➡ Wired LAN (page 333)

3. Press the [Enter] key.
   The connection test result is displayed.
   When a connection between the computer and scanner is available, a notification similar to the following will be displayed:

   ```
   Reply from xxx.xxx.xxx.xxx: bytes=32 time=59ms TTL=246
   ```

   If the connection between the computer and scanner fails, check that the correct IP address or host name has been specified.
   If you still cannot connect, refer to Cannot Connect the Scanner and a Computer via a Wired LAN (page 225) and take appropriate measures.

Uninstalling the Software

1 Turn on the computer and sign in to Windows as a user with administrator privileges.

2 Exit all running software.

3 Display [Control Panel] in Windows.

4 Select [Uninstall a program].

The [Programs and Features] window appears with a list of the currently installed software.

5 Select a software to uninstall.

- When uninstalling the PaperStream IP driver
  Select one of the following:
  - PaperStream IP (TWAIN)
  - PaperStream IP (TWAIN x64)
  - PaperStream IP (ISIS) fi-8000 Series
- When uninstalling Network Setup Tool
  Select [Network Setup Tool].
- When uninstalling Software Operation Panel/Error Recovery Guide
  Select [Software Operation Panel].
- When uninstalling Error Recovery Guide (manual)
  Click [Error Recovery Guide for fi-8600/fi-8700/fi-8700S].
- When uninstalling PaperStream ClickScan
  Select [PaperStream ClickScan].
- When uninstalling PaperStream Capture
  Select [PaperStream Capture].
- When uninstalling manuals
  Click [fi Series manuals for fi-8600/fi-8700/fi-8700S].
- When uninstalling fi Series Online Update
  Click [fi Series Online Update].

6 Click the [Uninstall]/[Uninstall/Change] button.

7 If a confirmation message appears, click the [OK]/[Yes] button.

The software is uninstalled.

Notes When Using IPv6

- **Scanner settings that do not support IPv6**

  The following settings do not support IPv6:

  - DNS Server
  - [Enable Dynamic DNS] check box

Notes When Exporting the Scanner Settings

The scanner settings can be applied to scanners of the same model via [Import the Scanner Setting Information] in fi Series Network Settings.

➡ Import the Scanner Setting Information (page 338)

This section explains how to export the scanner settings as a template from a scanner, to apply the settings on other scanners.
The following shows the items of the scanner settings and the exporting procedure.

- **Items of the Scanner Settings**

  The scanner settings include the following:

  - The scanner settings that are set in fi Series Network Settings

    ➡ Network Settings (fi Series Network Settings) (page 326)

    Note that the following settings cannot be exported:

    - [Scanner name] under [Network]
    - IP address (IPv4) and IP address (IPv6) in [Wired LAN] under [Network]

  - Backup of Software Operation Panel

- **Exporting Procedure**

  1. **Configure the scanner settings in fi Series Network Settings and Software Operation Panel.**

     ➡ Network Settings (fi Series Network Settings) (page 326)

     ➡ Scanner Settings (Software Operation Panel) (page 260)

  2. **In fi Series Network Settings, select [Maintenance] → [Export the Scanner Setting Information], and then export the scanner settings.**

     ➡ Export the Scanner Setting Information (page 337)

How to Start Network Setup Tool

Starting Up Scanner Selection Tool

To use the scanner connected to a network from a computer, you need to select the scanner in Scanner Selection Tool.
For details about Scanner Selection Tool, refer to the Network Setup Tool Help.

- For Windows 10/Windows Server 2016/Windows Server 2019/Windows Server 2022
  Click [Start] menu → [Network Setup Tool] → [Scanner Selection Tool].
- For Windows 11/Windows Server 2025
  Click [Start] menu → [All apps] → [Network Setup Tool] → [Scanner Selection Tool].

Starting Up IP Address Setting Tool

- For Windows 10/Windows Server 2016/Windows Server 2019/Windows Server 2022
  Click [Start] menu → [Network Setup Tool] → [IP Address Setting Tool].
- For Windows 11/Windows Server 2025
  Click [Start] menu → [All apps] → [Network Setup Tool] → [IP Address Setting Tool].

How to Start Button Event Manager

1 Perform one of the following:

- For Windows 10/Windows Server 2016/Windows Server 2019/Windows Server 2022
  Click [Start] menu → [Network Setup Tool] → [Button Event Manager].
- For Windows 11/Windows Server 2025
  Click [Start] menu → [All apps] → [Network Setup Tool] → [Button Event Manager].

When Button Event Manager is started,  appears in the notification area of the task bar.

2 When you want to refer to the help for button settings, right-click  and then click [Help] from the displayed menu.

Notes on Repackaging [fi-8700/fi-8700S]

Securing the Carrier Unit inside the Flatbed

Secure the carrier unit inside the flatbed so that the flatbed is not damaged during transport.
Use the following procedure to secure the carrier unit inside the flatbed.

1 **Turn on the scanner.**

➡ How to Turn the Power ON (page 44)

The carrier unit stops in about 10 seconds.

2 **Turn off the scanner.**

➡ How to Turn the Power OFF (page 46)

3 **Remove the ADF paper chute (feeder), stacker, and cables.**

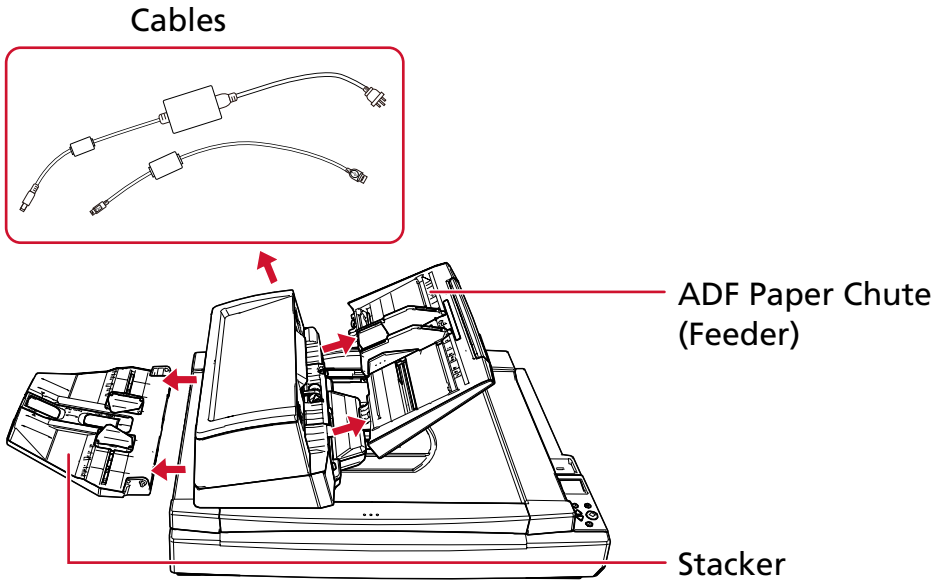

- Removing the ADF Paper Chute (Feeder)

  a Remove all documents from the ADF paper chute (feeder).

  b Remove the ADF paper chute (feeder).

Hold both ends of the ADF paper chute (feeder) and remove it in the direction of the arrow.

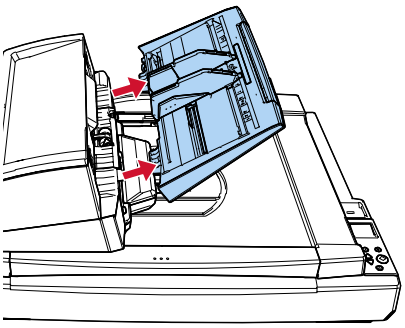

- Removing the Stacker

a Check that the stacker is placed in the lower position.

➔ Setting Up the Stacker (page 58)

b Remove the stacker from the scanner.

Hold the center (1) of the stacker and slightly bend it to remove the right side (2) of the stacker from the slot in the direction of the arrow.

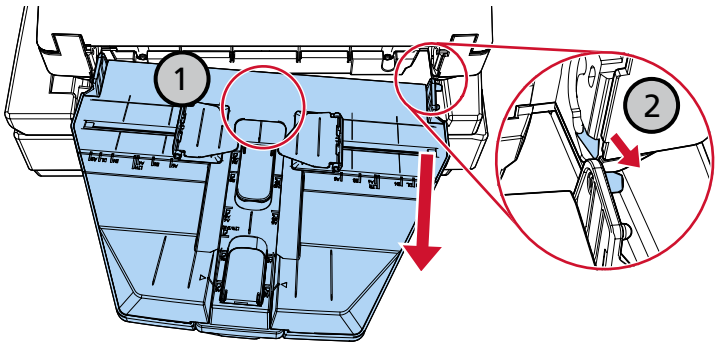

4 **Use a coin or similar tool to turn the transport lock switch until the slot is in the horizontal position to secure the carrier unit inside the flatbed.**

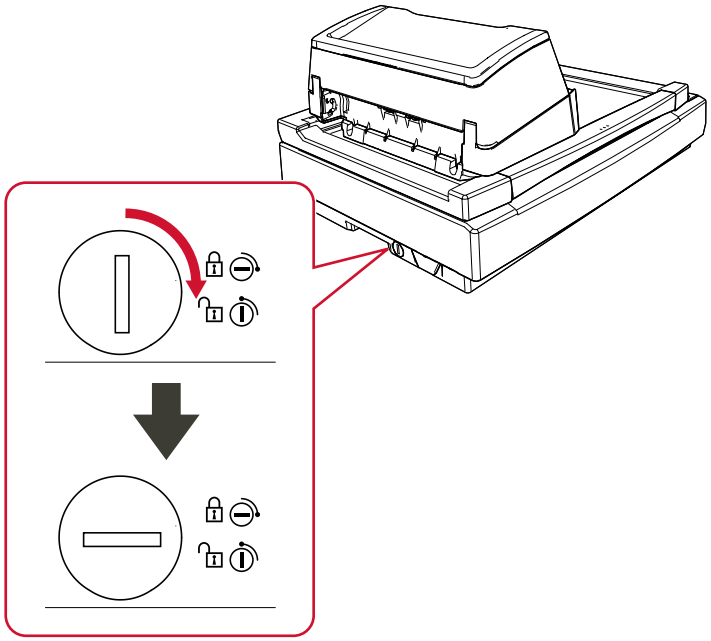

Fixing the ADF

Fix the ADF in place with the ADF lock screws so that the ADF is not damaged during transport.
The procedure for fixing the ADF in place is as follows:

1 **Turn off the scanner.**

➡ How to Turn the Power OFF (page 46)

2 **Remove the ADF paper chute (feeder), stacker, and cables.**

➡ Step 3 in Securing the Carrier Unit inside the Flatbed (page 356)

3 **Move the ADF to the left side.**

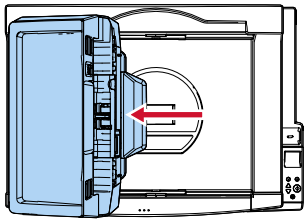

4 **Open the document cover.**

➡ How to Open the Document Cover (page 51)

5 **Remove the two ADF lock screws from the lock screw storage holes and attach them to the points to lock the ADF.**

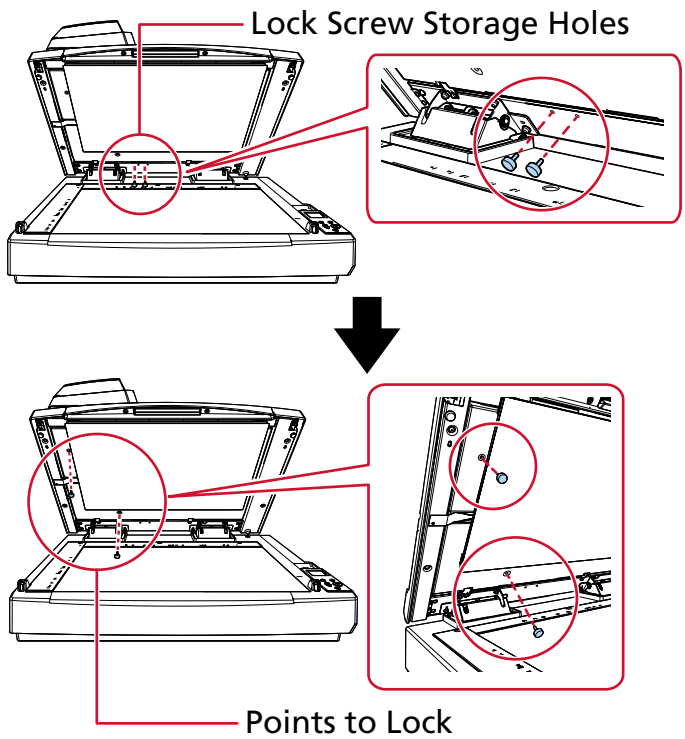

TIP

- Remove the document pad if the ADF lock screws are difficult to remove.
- If you remove the document pad, attach the document pad in the following procedure:

  1 Place the document pad against the upper left corner on the document bed.
  Make sure the groove in the document pad is in the correct place.

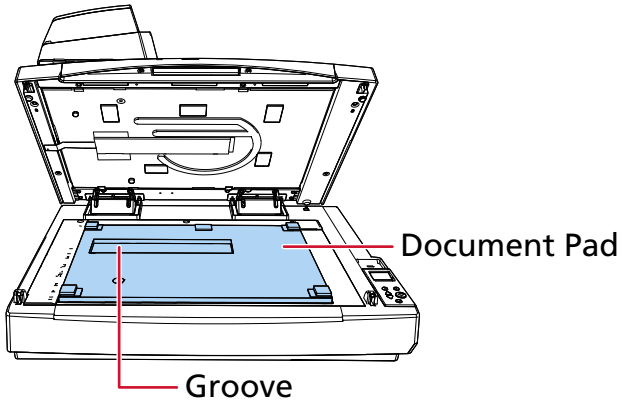

  2 Close the document cover slowly.
  When you close the document cover, the document pad is attached to the document cover.

6 Close the document cover slowly.

➡ How to Close the Document Cover (page 52)

Installing the ADF Paper Chute (Feeder) and the Stacker

The procedure to install the ADF paper chute (feeder) and the stacker after opening the package for the scanner is as follows:
For details about how to connect the scanner to the computer, refer to Getting Started.

1 Install the ADF paper chute (feeder) and the stacker.

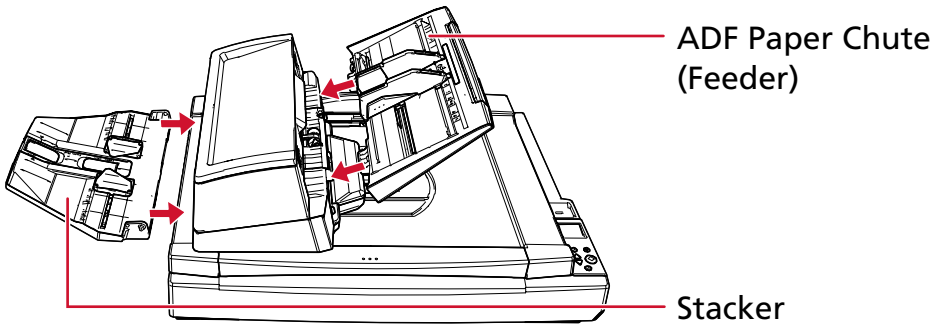

- Attaching the ADF Paper Chute (Feeder)
  Insert the ADF paper chute (feeder) in the direction of the arrow and attach it so that the tabs on the ADF paper chute (feeder) fit into the holes on the ADF.
  Attach the ADF paper chute (feeder) with the side guides facing upwards.

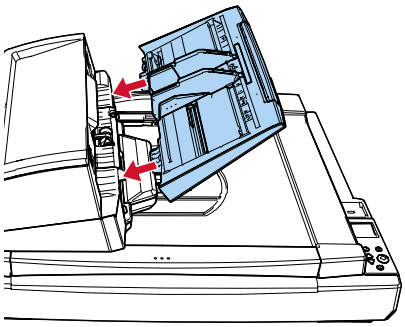

ATTENTION

Do not leave any space between the ADF paper chute (feeder) and the ADF.

- Attaching the Stacker

Insert the protrusion on the right side of the stacker into the slot (1) and then push the left side of the stacker along the slot (2) in the direction of the arrow.

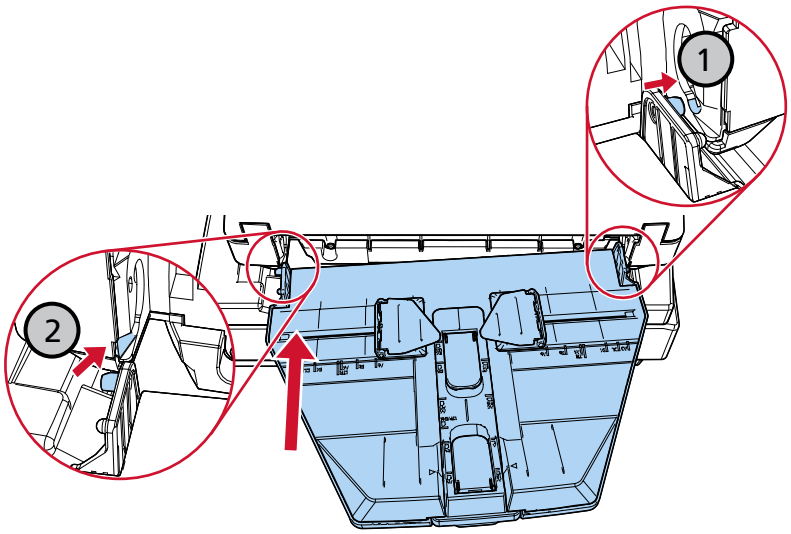

Contact for Inquiries

- **Contact for Inquiries**

  Refer to the contact list on the following web page:
  https://www.pfu.ricoh.com/global/scanners/contacts/

  - fi Series image scanners
    For other inquiries regarding the scanner, refer to the following web page:
    https://www.pfu.ricoh.com/global/scanners/fi/support/
    If the solution to your problem cannot be found on the above web page, refer to the contact information for your distributor/dealer on the following web page:
    https://www.pfu.ricoh.com/global/scanners/inquiry.html

- **Contact for Purchasing Consumables or Cleaning Materials**

  https://www.pfu.ricoh.com/global/scanners/contacts/