P3PC-7762-01ENZ0

RICOH

RICOH fi-760PRB Imprinter

Operator's Guide

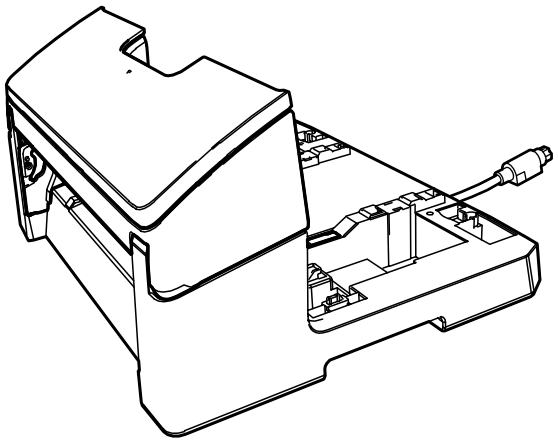

Contents

Introduction 4

Trademarks 4
Manufacturer 4
Issue Date/Issuer 4
Safety Information 4
Abbreviations Used in This Manual 4
Arrow Symbols in This Manual 5
Screen Examples in This Manual 5
Notice 6

Preparations 7

Checking the Package Contents 7
Names of Component Parts 7
Without the Scanner 7
With the Scanner 8
Inside of the Imprinter 9

Installation and Test Print 10

Installing the Imprinter 10
Installing the Print Cartridge 18
Test Print 22
Print Patterns and the Results 23

Basic Operation 25

Setting the Position in Which to Print 25
Using the Paper Guides 27
Printing Close to the Edge of Documents Wider than A6 Portrait Size Documents 28
Removing the Paper Guides 30
Attaching the Paper Guides 30
Imprinter Settings 31
Replacing the Print Cartridge 32
Removing Jammed Documents 35

Daily Care 37

Cleaning the Print Cartridge **37**

Cleaning the Imprinter **38**

Cleaning the Rollers **41**

Cleaning Materials **44**

Error Messages 45

Checking the Product Label 47

Specifications 48

Contact for Inquiries 51

Introduction

Thank you for purchasing this product.
This product is an optional unit to be used with RICOH fi-8600 or RICOH fi-7600, that can print text (e.g. alphabets, numbers) on a document after scanning.
This manual explains installation and connection, basic operations, and regular maintenance of the product. Use the product correctly according to this manual.
For how to use RICOH fi-8600 or RICOH fi-7600, refer to RICOH fi-8600/fi-8700/fi-8700S Operator's Guide or RICOH Image Scanner fi-7600/fi-7700/fi-7700S Operator's Guide.
We hope that this manual helps you make the most of the product.

Trademarks

Microsoft, Windows, and Windows Server are trademarks of the Microsoft group of companies.
PaperStream is a registered trademark of PFU Limited in Japan.
Other company names and product names are the registered trademarks or trademarks of the respective companies.

Manufacturer

PFU Limited
YOKOHAMA i-MARK PLACE, 4-5 Minatomirai 4-chome, Nishi-ku, Yokohama-shi, Kanagawa 220-8567 Japan.

Issue Date/Issuer

Issue date: August 2026
Issued by: PFU Limited
Regulatory Model: P3740D
© PFU Limited 2017-2026

Safety Information

The attached "Safety Precautions" manual contains important information about the safe and correct use of this product.
Make sure that you read and understand it before using the scanner.

Abbreviations Used in This Manual

The operating systems and products in this manual are indicated as follows.

Name	Indication
Windows® 10 Home (32-bit/64-bit) Windows® 10 Pro (32-bit/64-bit) Windows® 10 Enterprise (32-bit/64-bit) Windows® 10 Education (32-bit/64-bit)	Windows 10 (*1)
Windows® 11 Home (64-bit) Windows® 11 Pro (64-bit) Windows® 11 Enterprise (64-bit) Windows® 11 Education (64-bit)	Windows 11 (*1)
Windows Server® 2016 Standard (64-bit)	Windows Server 2016 (*1)
Windows Server® 2019 Standard (64-bit)	Windows Server 2019 (*1)
Windows Server® 2022 Standard (64-bit)	Windows Server 2022 (*1)
Windows Server® 2025 Standard (64-bit)	Windows Server 2025 (*1)
PaperStream IP (TWAIN) PaperStream IP (TWAIN x64) PaperStream IP (ISIS) fi-8000 Series	PaperStream IP driver
RICOH fi-760PRB Imprinter	imprinter
RICOH fi-8600 RICOH fi-7600	scanner
RICOH fi-8600/fi-8700/fi-8700S Operator's Guide RICOH Image Scanner fi-7600/fi-7700/fi-7700S Operator's Guide	Operator's Guide

***1:**Where there is no distinction between the different versions of the above operating system, the general term "Windows" is used.

Arrow Symbols in This Manual

Right-arrow symbols (→) are used to separate icons or menu options which should be selected in succession.

Example: Click [Start] menu → [Control Panel].

Screen Examples in This Manual

Microsoft product screenshots are reprinted with permission from Microsoft Corporation.
The screen examples in this manual are subject to change without notice in the interest of product development.

If the actual displayed screen differs from the screen examples in this manual, operate by following the actual displayed screen while referring to the user's manual of the scanner application that you are using.
The screen examples used in this manual are of the PaperStream IP driver.
The screenshots used in this manual are of Windows 10. The actual windows and operations may differ depending on the operating system. Also note that the screens and operations may differ from this manual after the scanner application software is updated. In that case, refer to the manual provided upon updating the software.

Notice

- The contents of this manual are subject to change without notice.
- PFU Limited assumes no liability for incidental or consequential damages arising from the use of this product, and any claims by a third party.
- Copying of the contents of this manual, in whole or in part, as well as the scanner applications is prohibited under the copyright law.

Preparations

Checking the Package Contents

Check the package contents list that is included in the imprinter package box to make sure that all items are included in the package.
If anything is missing or damaged, contact the distributor/dealer where you purchased this product.
Use this product and accessories carefully.

Names of Component Parts

Without the Scanner

- **Front**

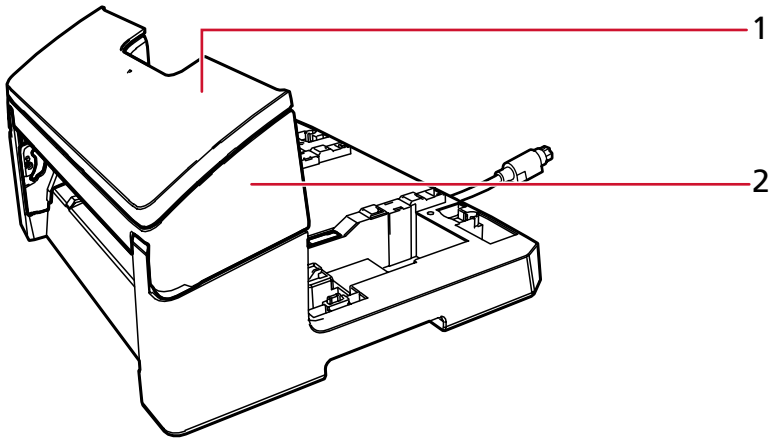

1 Print cartridge cover

2 Print section (imprinter cover)

- **Back**

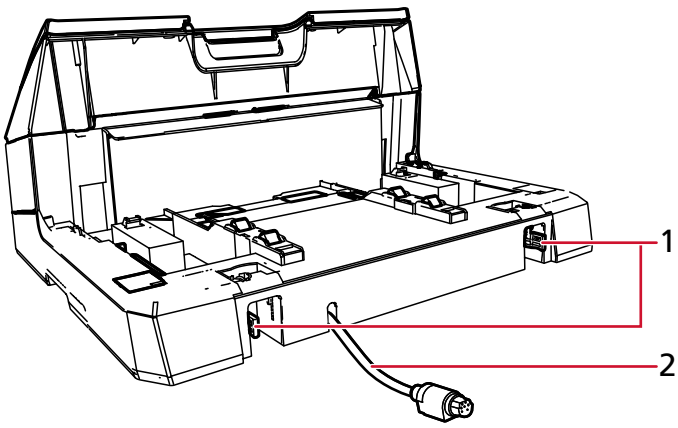

1 Lock

2 EXT cable

With the Scanner

- **Front**

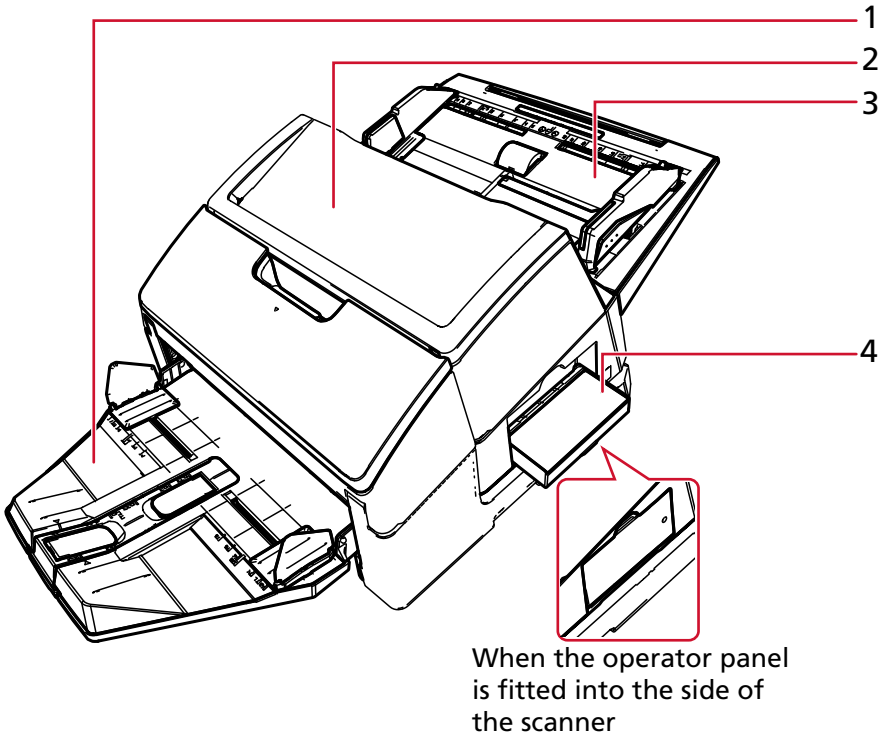

When the operator panel is fitted into the side of the scanner

1 Stacker

2 ADF (Automatic Document Feeder)

3 ADF paper chute (feeder)

4 Operator panel

- **Back**

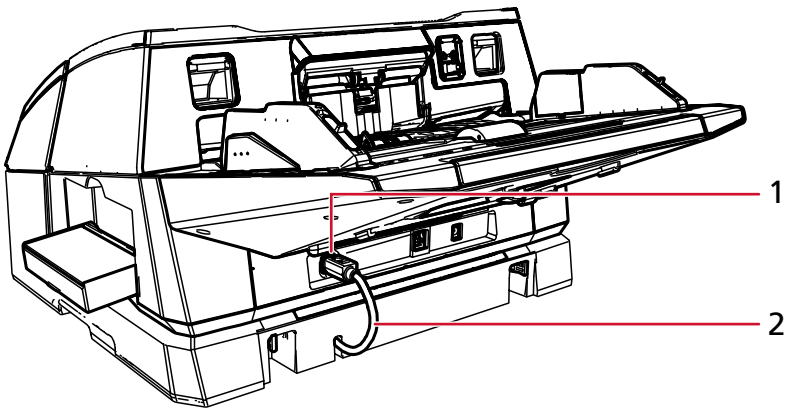

1 EXT connector

2 EXT cable

Inside of the Imprinter

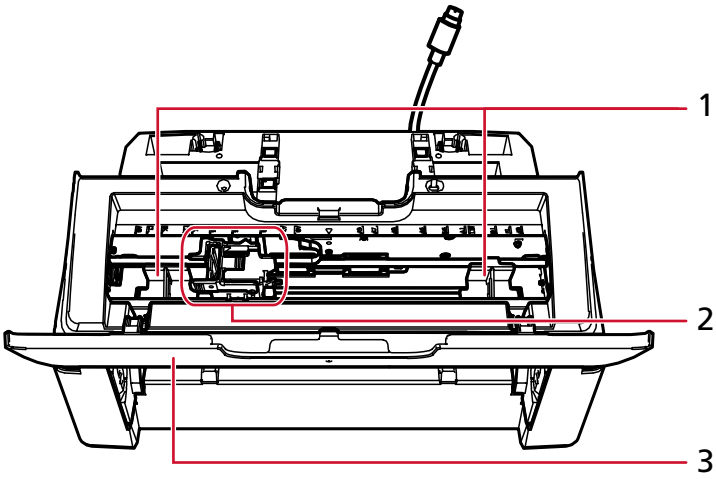

1 Paper guide

2 Print cartridge holder

3 Print cartridge cover

Installation and Test Print

Installing the Imprinter

Install the imprinter in the following procedure.

1 Turn off the scanner and disconnect the power cable.

2 Remove the stacker from the scanner.

a Check that the stacker is placed in the lower position.
You can lower the position of the stacker by tilting it upwards a little.

b Hold the center (1) of the stacker and slightly bend it to remove the right side (2) of the stacker from the slot in the direction of the arrow.

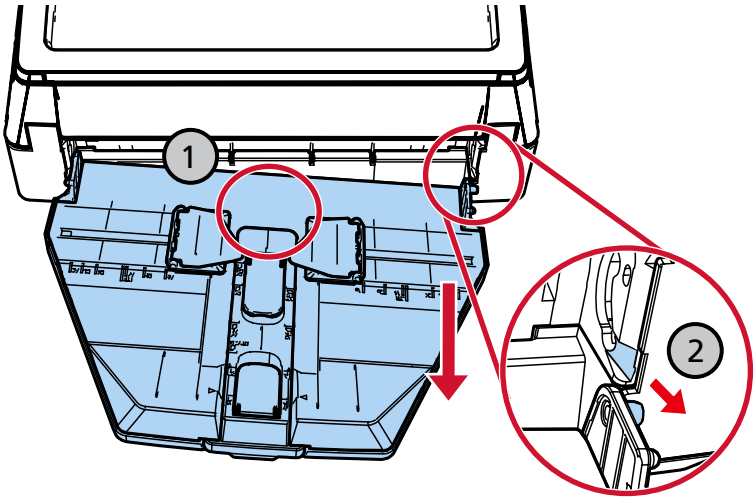

ATTENTION

- Make sure you remove the stacker before installing the imprinter.
- Do not pull forcibly, since this might damage the stacker.

3 Attach the attachment guide to the scanner.

a Make sure that the direction of the attachment guide is the same as direction shown in the following figure.

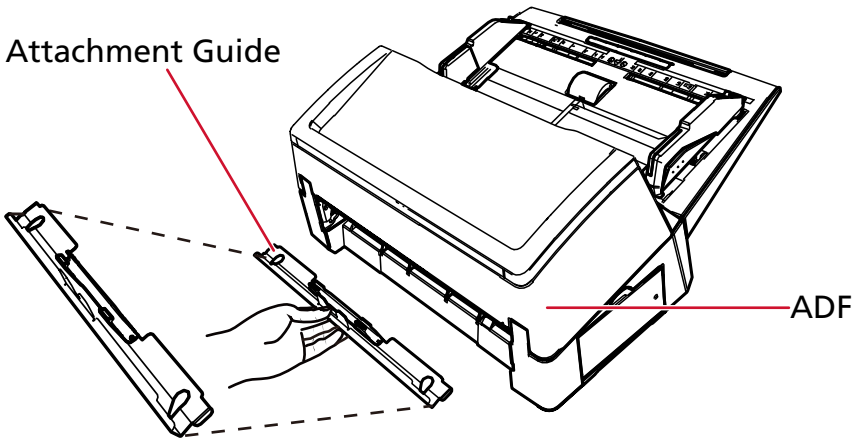

b Look into the scanner from below to check the position of the bar.

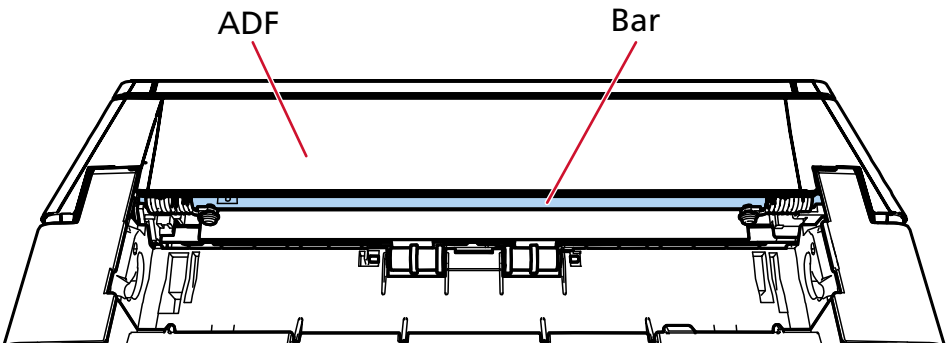

c Align the attachment guide with the bar.

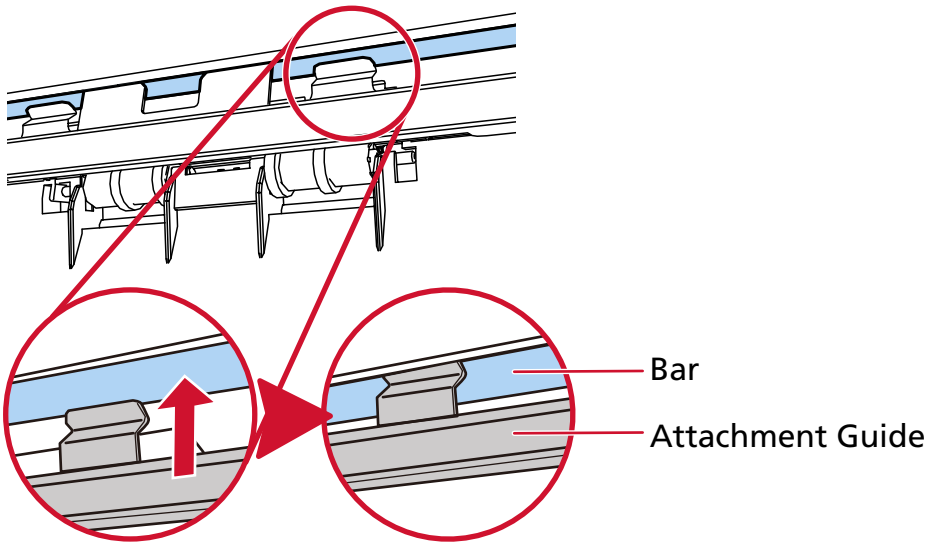

d Lift the attachment guide from underneath to attach it.

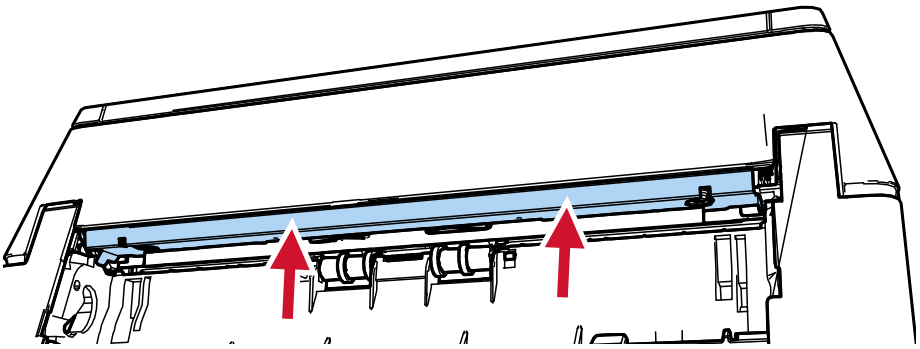

ATTENTION

Confirm the following after attaching the attachment guide.

- The attachment guide is not tilted.
- The attachment guide is fitted in the scanner, and not overhanging.

Good: The attachment guide is properly attached.

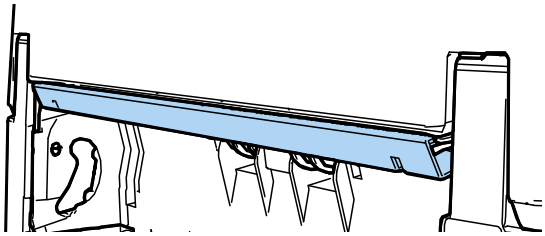

Bad: The attachment guide is tilted.

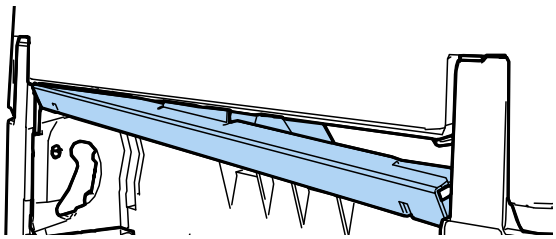

Bad: The attachment guide is overhanging.

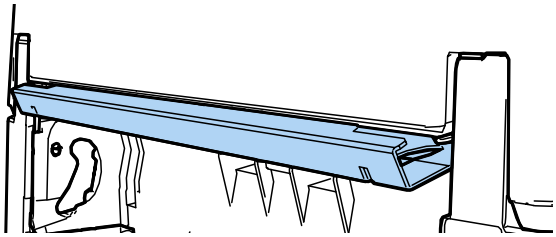

TIP

To remove the attachment guide, press your fingers against the attachment guide and slide it downward.

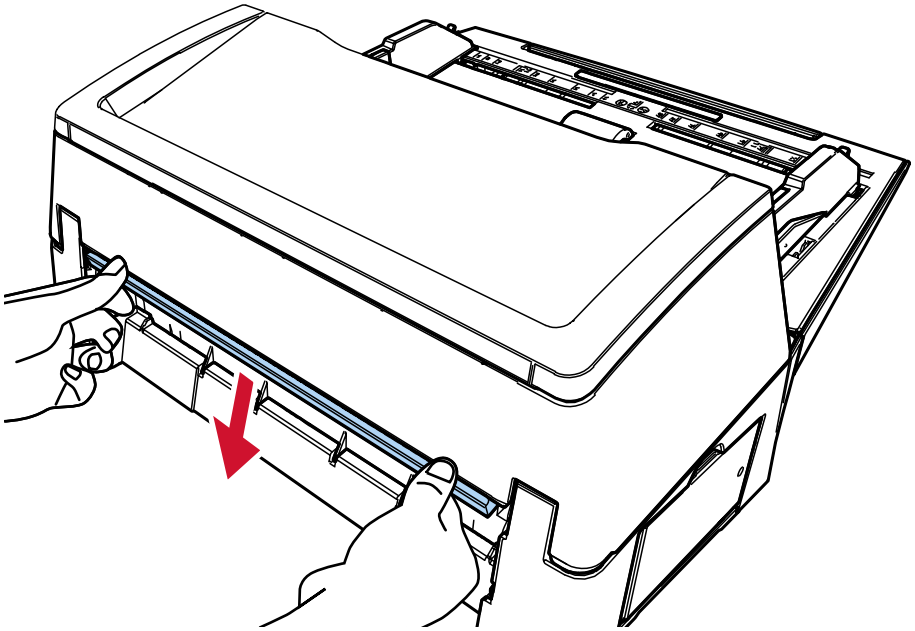

4 Attach the imprinter to the scanner.

Hold the scanner above the rear side of the imprinter and gently lower it onto the base of the imprinter until it fits in place.

Make sure there is no gap between the imprinter and the scanner.

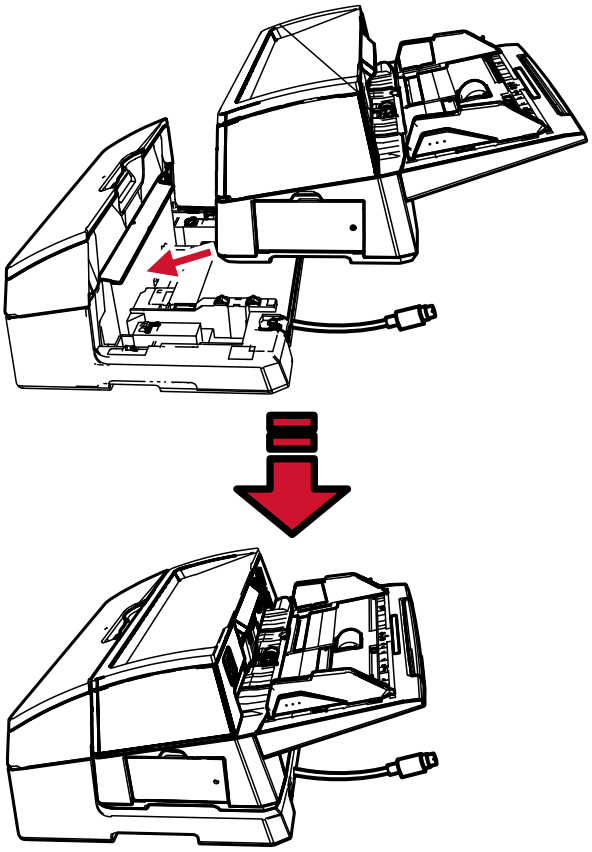

ATTENTION

Be careful not to get your fingers or the EXT cable caught.

5 **Raise the locks (two locks on the back side).**

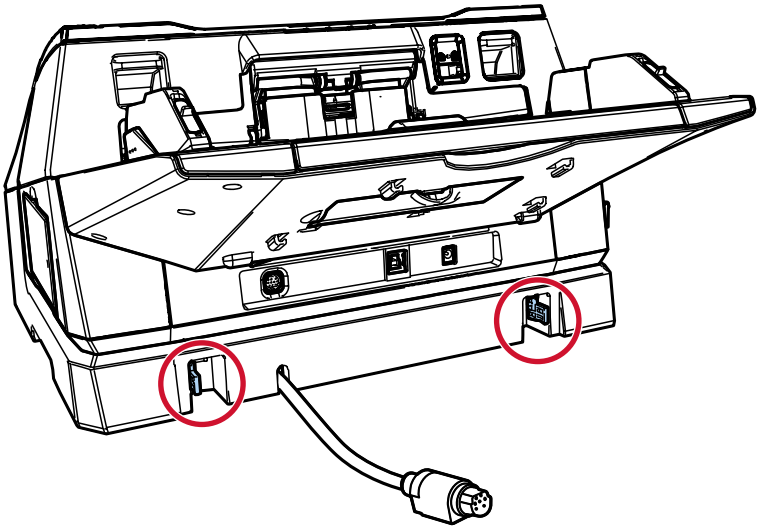

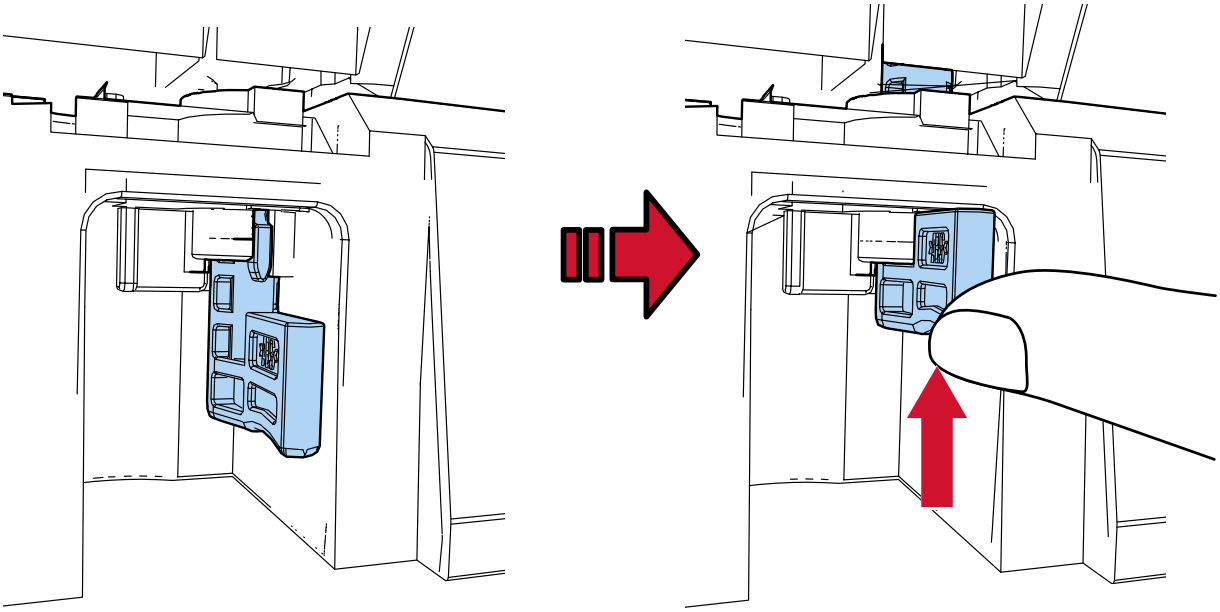

6 **Turn the locks (two locks on the back side) inward.**

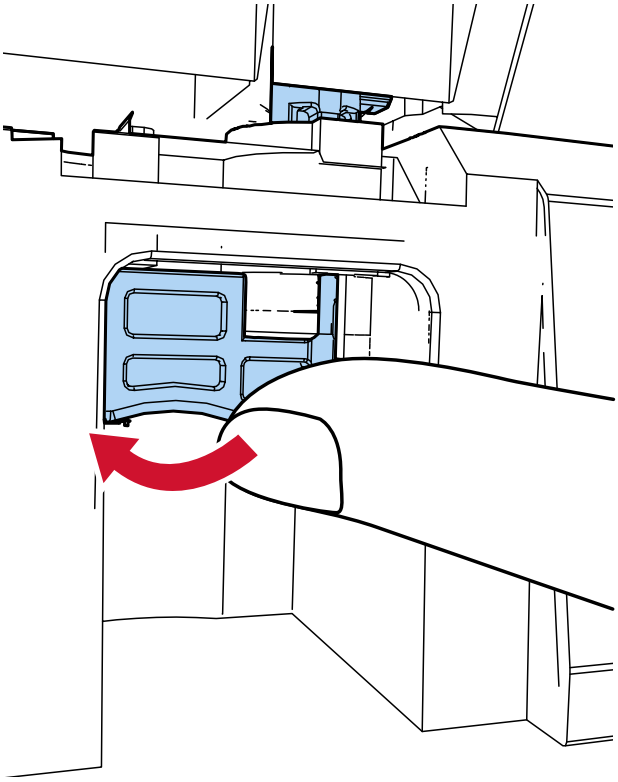

7 **Connect the EXT cable to the EXT connector on the back of the scanner.**

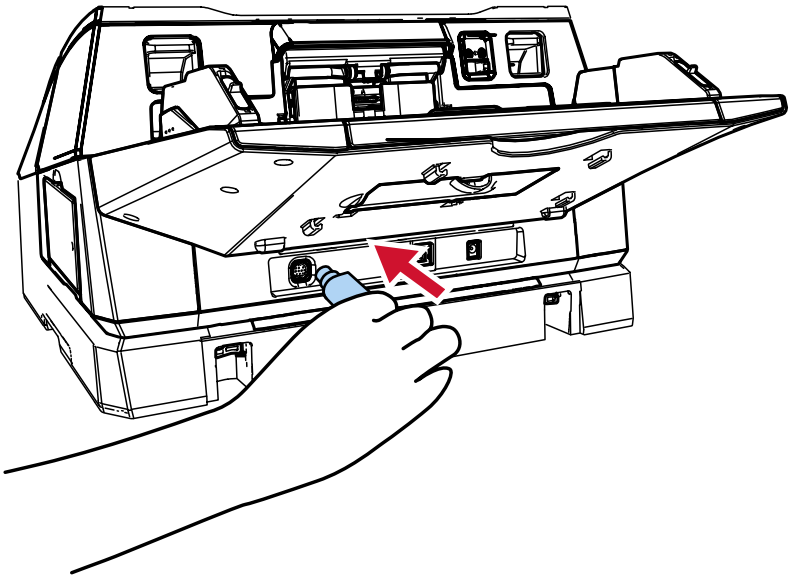

ATTENTION

If the EXT cable is not connected, the imprinter does not work. Scanning documents without the cable connected will cause paper jams.

8 **Install the stacker (removed in step 2) to the front side of the imprinter.**

a **Insert the protrusion on the right side of the stacker into the slot ① and then push the left side of the stacker along the slot ② in the direction of the arrow.**

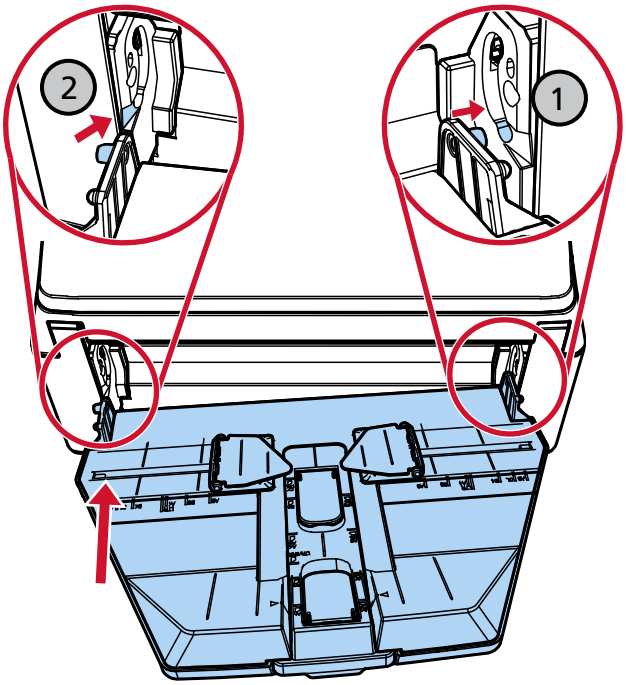

9 **Connect the power cable.**

ATTENTION

Do not move the scanner with the imprinter installed.
The imprinter may be damaged.

Installing the Print Cartridge

Install the print cartridge in the following procedure.

ATTENTION

When installing the print cartridge, make sure that you install it in the correct orientation.

1 **Turn off the scanner.**

2 **Open the print cartridge cover.**

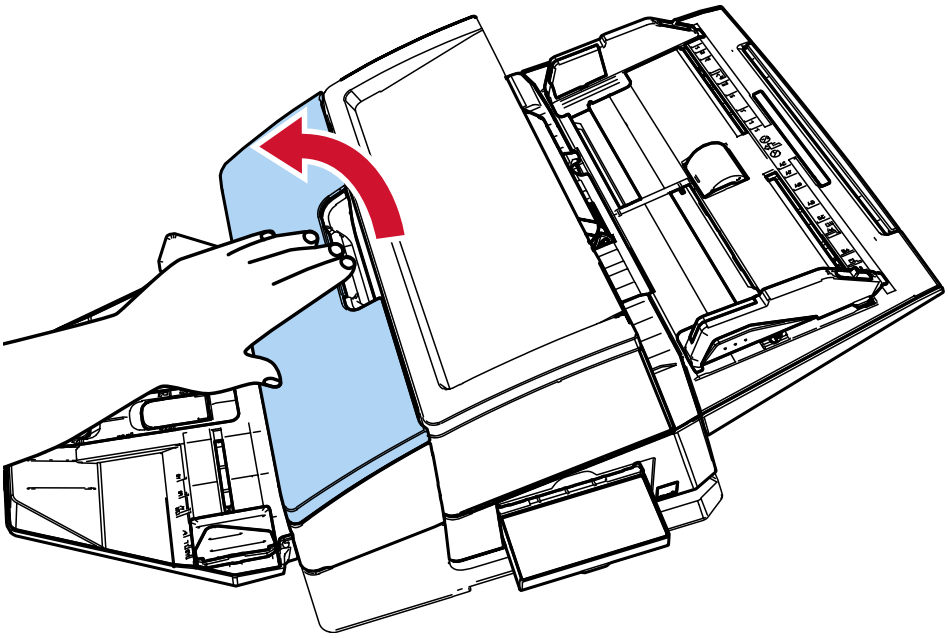

3 **When purchasing the imprinter and installing the print cartridge for the first time, remove the tape that holds the print cartridge holder and the paper guides.**

4 **Pinch and lower the arms of the print cartridge holder with your fingers as shown below to raise the arms on the other end.**

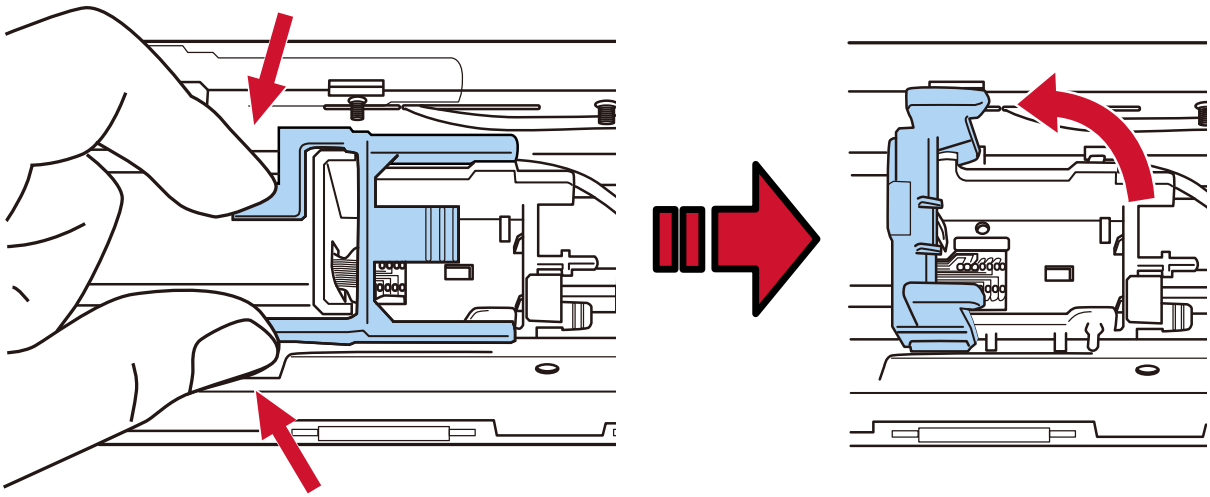

5 **Take out the print cartridge from the bag.**

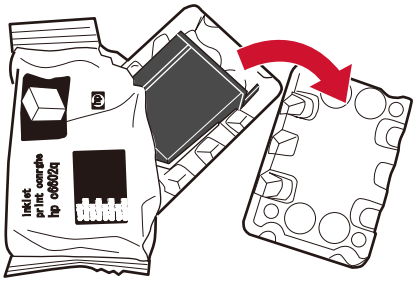

6 **Remove the protection tape on the print cartridge.**

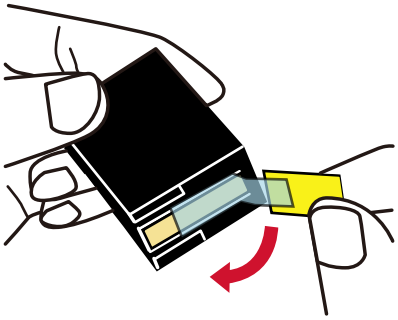

ATTENTION

- Do not put the tape back again.
- Be careful not to touch the print head of the print cartridge (the contact part (A) and the nozzle plate (B)) with your hands. Printing may be out of order.

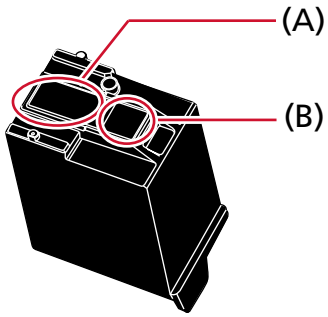

7 **With the tab (C) on the print cartridge facing right, put the print cartridge into the holder.**

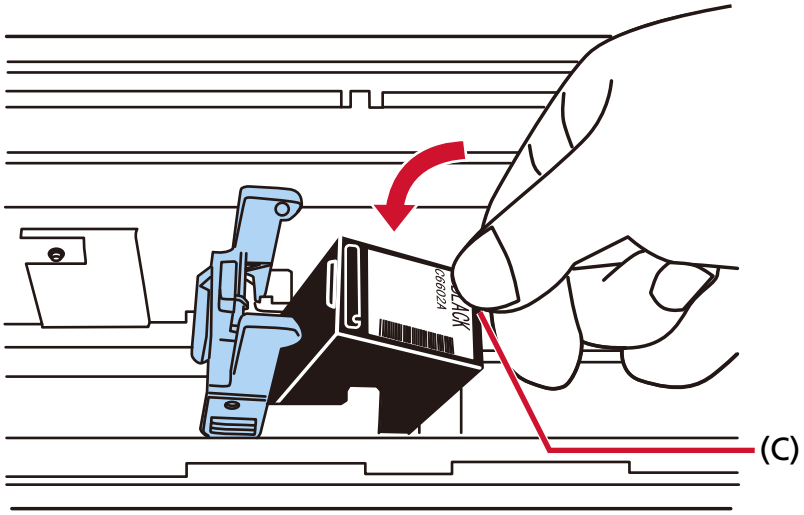

ATTENTION

Be careful not to let the print cartridge catch the print circuit film (D) to avoid damaging the film.

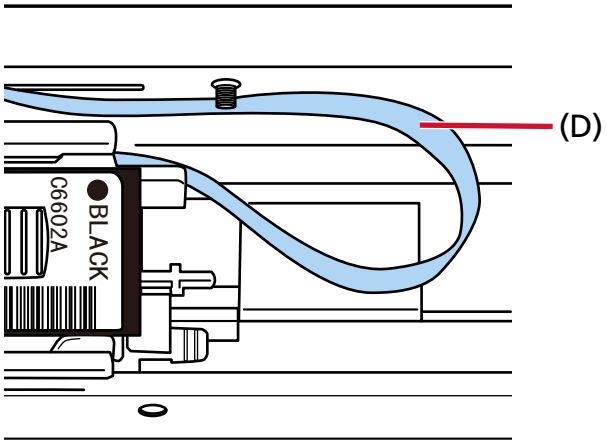

8 **Bring down the arm of the print cartridge holder down gently until it locks in and set the print cartridge in place.**

Make sure that the catches (E) on the arm latch onto the print cartridge firmly.

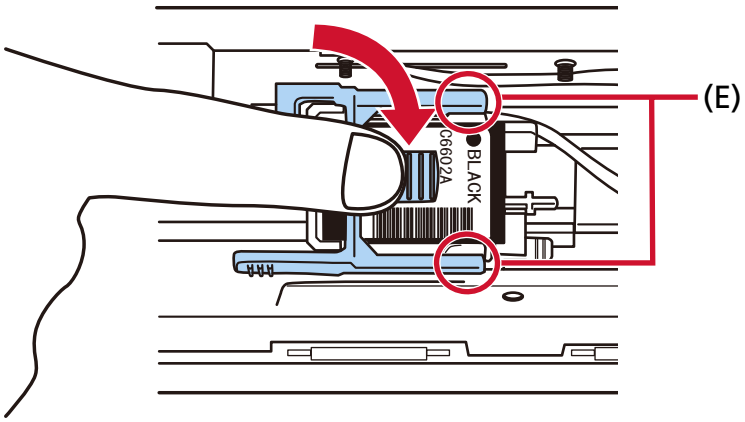

9 Move the print cartridge holder to an appropriate position in which to print.

➡ Setting the Position in Which to Print (page 25)

10 Close the print cartridge cover.

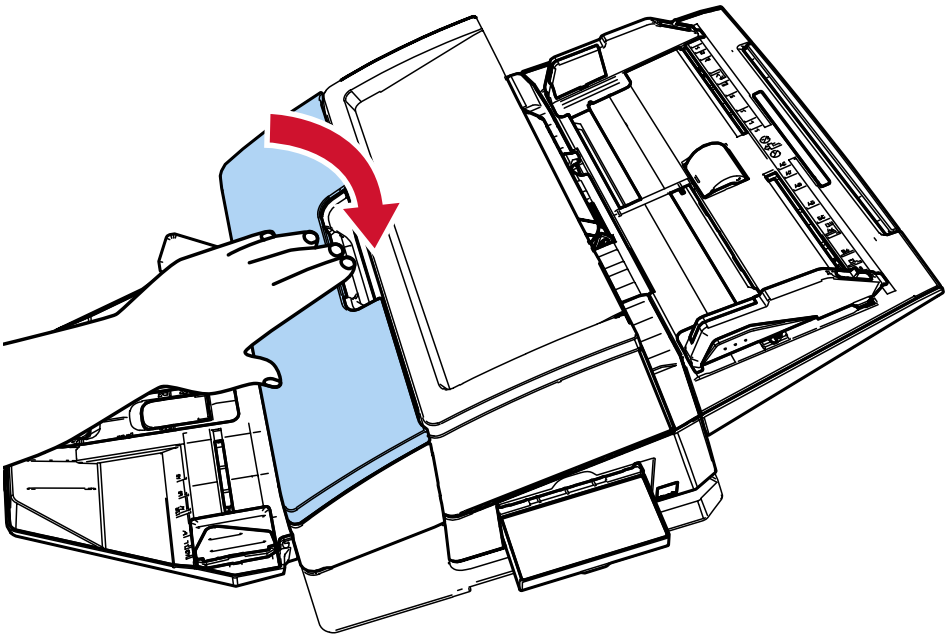

ATTENTION

When you do not use the imprinter for a long time, remove the print cartridge.
Ink will be consumed every time the scanner is powered-on even if printing is not done.

Test Print

After installing the print cartridge, check if the printing operation works normally.

TIP

For details about the operator panel, refer to the Operator's Guide for your scanner.

1 **Press the [Power] button on the operator panel on the scanner.**

For fi-8600 (example)

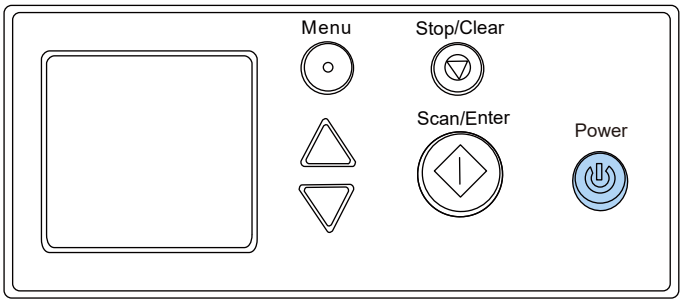

The [Ready] screen is displayed on the LCD.

2 **Load blank documents in the scanner.**

Load one or more documents.

Use A3 or Double Letter size blank paper.

If the paper size is smaller than A4 or Letter, printing may not complete successfully.

3 **Make sure that the print cartridge holder is positioned within the document width.**

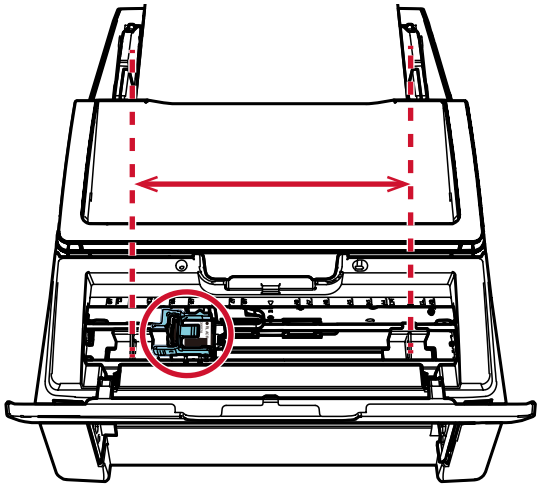

4 **Press the [Menu] button.**

The [Settings Menu] screen is displayed on the LCD.

5 **Press the [△] button/[▽] button and select [3:Test Print], and then press the [Scan/Enter] button.**

The [No. of sheets scanned] screen is shown on the LCD.

ATTENTION

If the Imprinter is disconnected or not connected properly, [Cannot use this function because the Imprinter is not connected.] is shown on the LCD.

6 **Press the [△] button/[▽] button and select [1:Single sheet only] or [2:Multiple sheets], then press the [Scan/Enter] button to confirm.**

When [2:Multiple sheets] is selected, printing is performed for all sheets set in the scanner.

The [Print Pattern] screen is shown on the LCD.

7 **Press the [△] button/[▽] button and select a print pattern, and then press the [Scan/Enter] button.**

For details about print patterns, refer to Print Patterns and the Results (page 23).

The [Test Print] screen is shown on the LCD.

8 **Press the [△] button/[▽] button and select [1:Yes], and then press the [Scan/Enter] button.**

The blank sheets are fed into the scanner, and the imprinter will print out a print pattern leaving a 5 mm gap (with an allowance of 4 mm inwards or outwards) from the edge of each document.

ATTENTION

Do not move the imprinter or give it a jolt while printing.
Printing may be out of order.

9 **To finish the print test, press the [Power] button on the operator panel of the scanner to turn off the power of the scanner.**

Print Patterns and the Results

- **Print Pattern**

Pattern 1 (Horizontal):

ABCDEFGHIJKLMNOPQRSTUVWXYZ[¥]^_`00000000

Pattern 2 (Horizontal):

abcdefghijklmnopqrstuvwxyz{|}¯00000000

Pattern 3 (Horizontal):

!"#$%&'()*+,-./0123456789:;<=>?@00000000

Pattern 4 (Vertical):

ABCDEFGHIJKLMNOPQRSTUVWXYZ[¥]^_`00000000

Pattern 5 (Vertical):

abcdefghijklmnopqrstuvwxyz{|}~00000000

Pattern 6 (Vertical):

!"#$%&'()*+,-./0123456789:;<=>?@00000000

TIP

The numbering section "00000000" increases in increments of one, starting from 0 (zero).

Example

If you select [2:Multiple sheets] and [Pattern 1], load three blank documents, and run a test print, the results on each sheet are as follows:

1st sheet: ABCDEFGHIJKLMNOPQRSTUVWXYZ[¥]^_`00000000

2nd sheet: ABCDEFGHIJKLMNOPQRSTUVWXYZ[¥]^_`00000001

3rd sheet: ABCDEFGHIJKLMNOPQRSTUVWXYZ[¥]^_`00000002

- **Print Pattern and the Result**

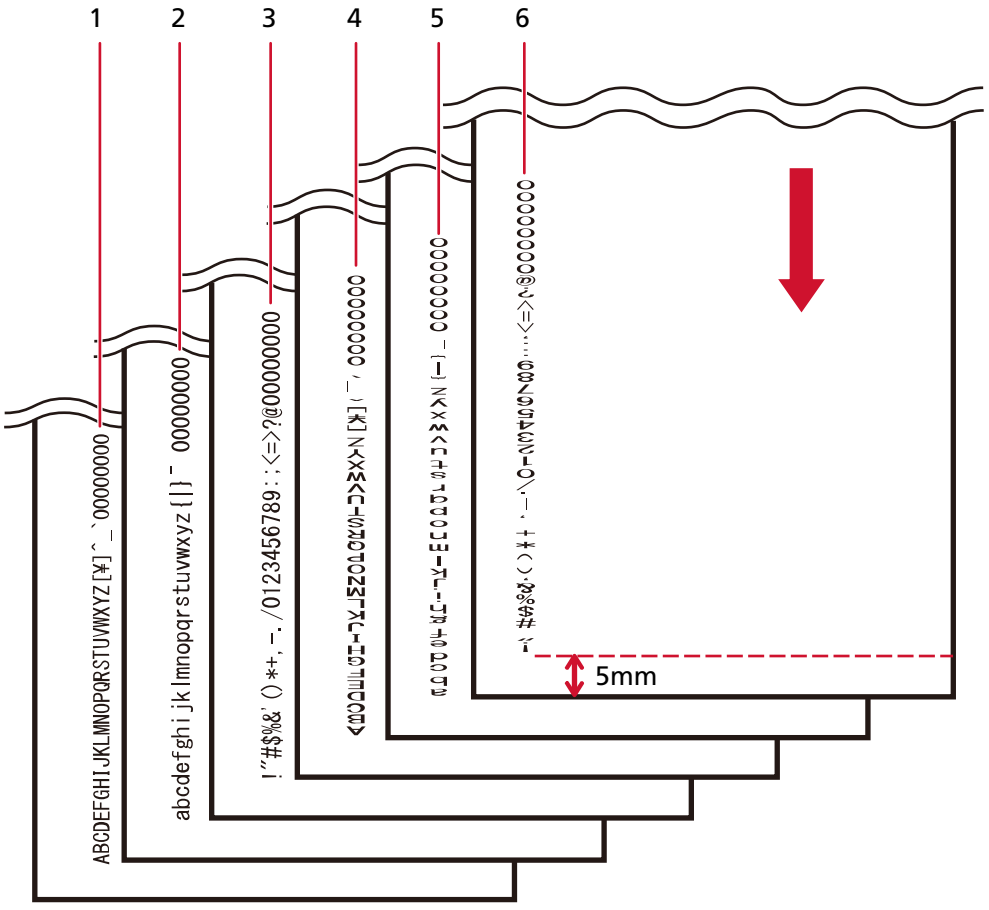

↓: Feed direction for blank documents

Setting the Position in Which to Print

Set the position in which to print in the following procedure.

1 **Open the print cartridge cover.**

2 **Move the print cartridge holder to an appropriate position in which to print.**

a **Slide the print cartridge holder to the left or right within the document width.**

b **Use the document size markings (A) inside the imprinter as a guide and align the part (B) of the print cartridge holder with the position in which you want to print.**
If the paper guide is located at the position in which you want to print, refer to Printing Close to the Edge of Documents Wider than A6 Portrait Size Documents (page 28) to move them.

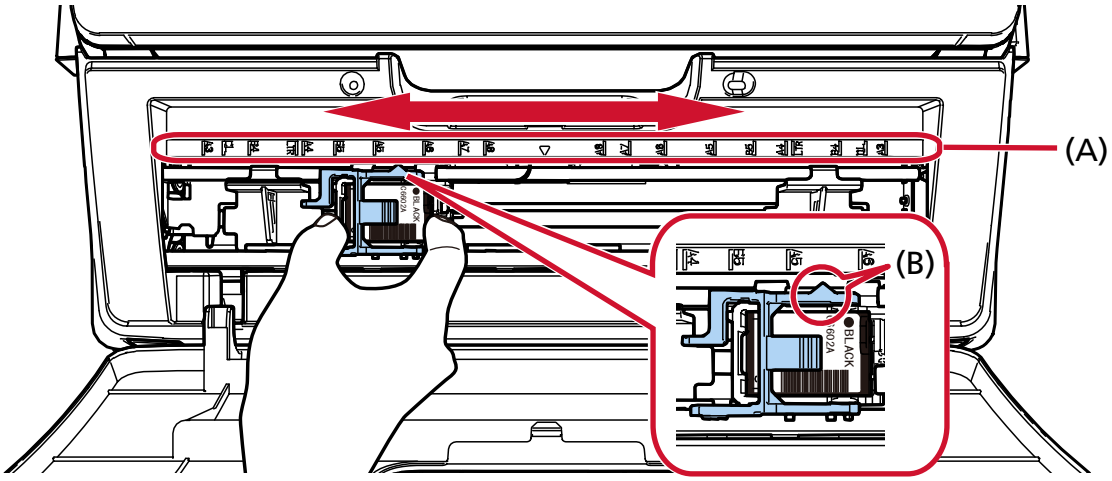

ATTENTION

When printing close to the document edge, printing may occur outside of the document range so set the position of the print cartridge carefully.

TIP

Load the actual document in the scanner and make sure that the print cartridge holder is positioned within the document width.

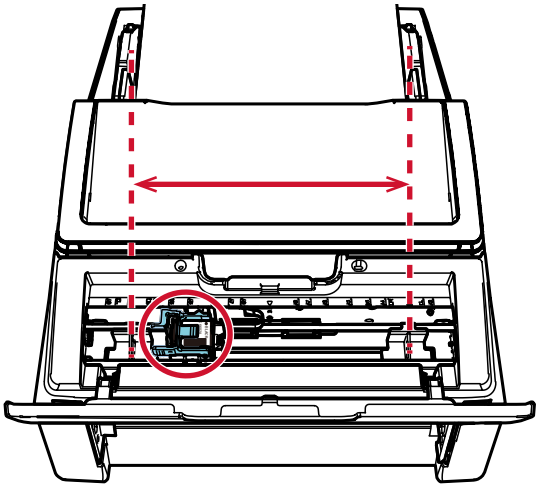

Using the Paper Guides

When documents have curled edges like the figure below, use the paper guides to prevent paper jams.

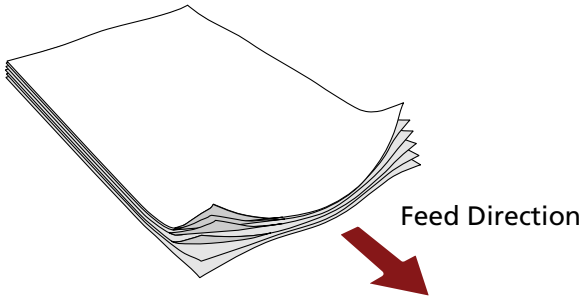

Move the paper guides to the positions where the edges of documents pass through in the following procedure.

1. **Load documents in the scanner.**
2. **Open the print cartridge cover.**
3. **Slide the paper guides (A) to the positions where the edges of documents pass through.**
   Use the document size markings (B) inside the imprinter as a guide when positioning the paper guides.
   Example: For A4 size documents

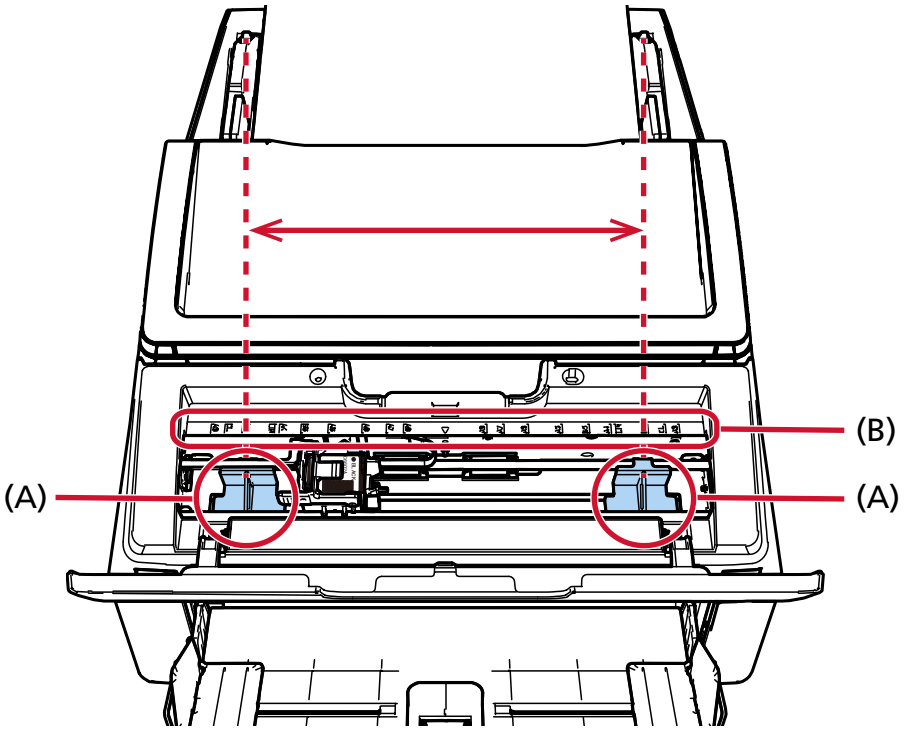

ATTENTION

Be careful not to let the paper guides come into contact with the print circuit film (C) to avoid damaging the film.

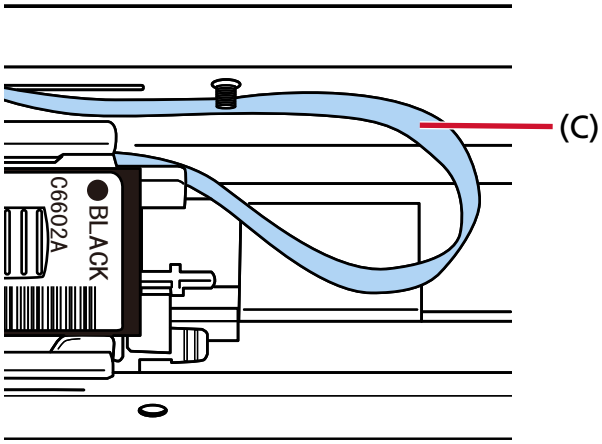

Printing Close to the Edge of Documents Wider than A6 Portrait Size Documents

Move the paper guide in order to print close to the edge of documents wider than A6 portrait size documents.

1 **Remove the paper guide from the position in which you want to print.**

➡ Removing the Paper Guides (page 30)

2 **Attach the paper guide in the available space (A) near the center and slide the print cartridge holder to the edge (B).**

➡ Attaching the Paper Guides (page 30)

For right-edge printing

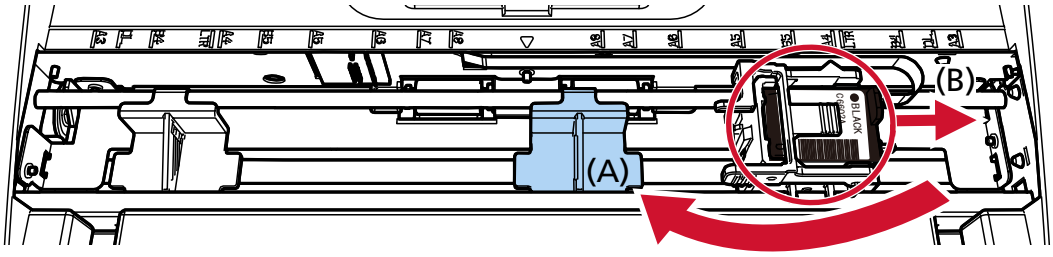

For left-edge printing

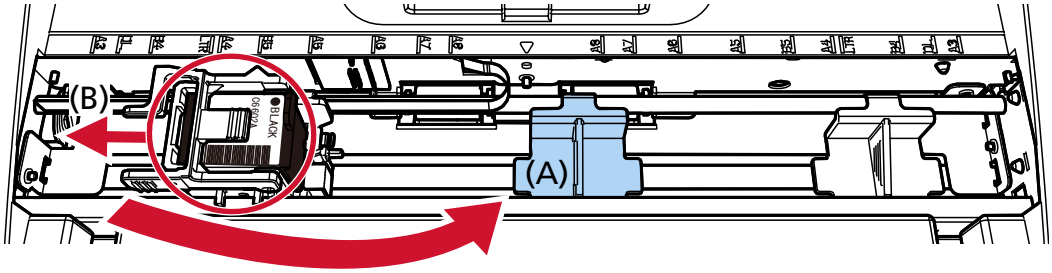

3 Adjust the position of the print cartridge holder.

➡ Setting the Position in Which to Print (page 25)

Removing the Paper Guides

1 **To remove the paper guides, pinch the paper guide with your fingers and pull it out.**
If it is difficult to remove, turn the paper guide to unlatch the catch in (A) and pull it off.

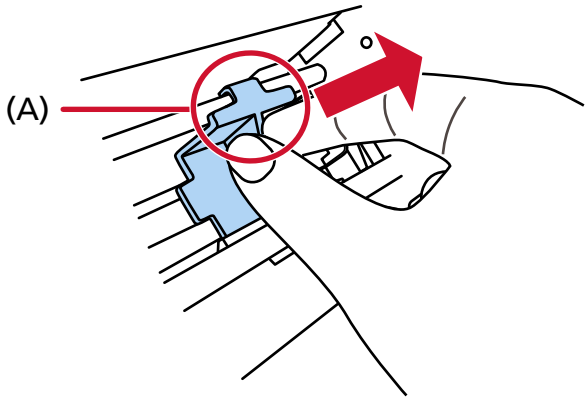

Attaching the Paper Guides

1 **Put the paper guide in place.**
Make sure that the paper guide is under the metal wheel (A).

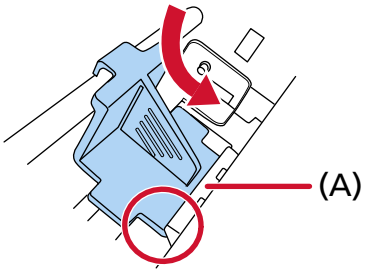

2 **Push down the part (B) of the paper guide until it fits in well.**

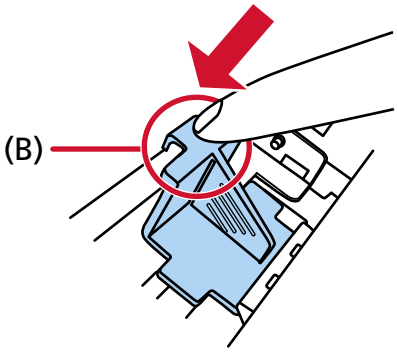

Imprinter Settings

You can configure settings for the imprinter in the scanner driver.
For details about how to configure the settings, refer to the help for the scanner driver.

- **PaperStream IP (TWAIN) (Example)**

  Display the Advanced dialog and configure the settings in [Imprinter] of [Endorser].

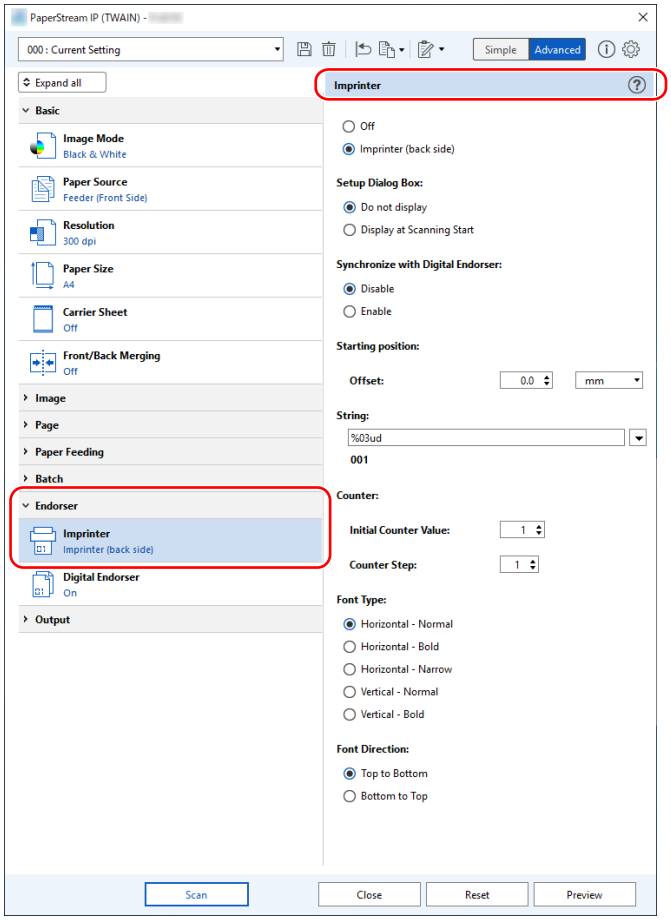

Replacing the Print Cartridge

The print cartridge is a consumable.
Replace the print cartridge in the following procedure.

ATTENTION

When the following message appears, replace the print cartridge as soon as possible.
If you continue to print without replacing the cartridge, your print output will be faded.

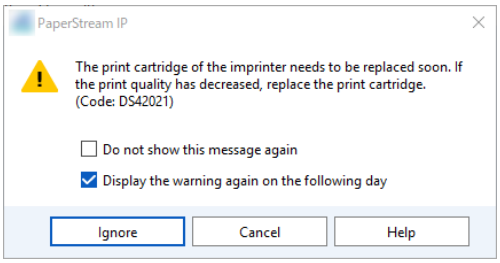

For information on purchasing the print cartridge, contact the distributor/dealer where you purchased this product.

1 **Turn off the scanner.**

2 **Open the print cartridge cover.**

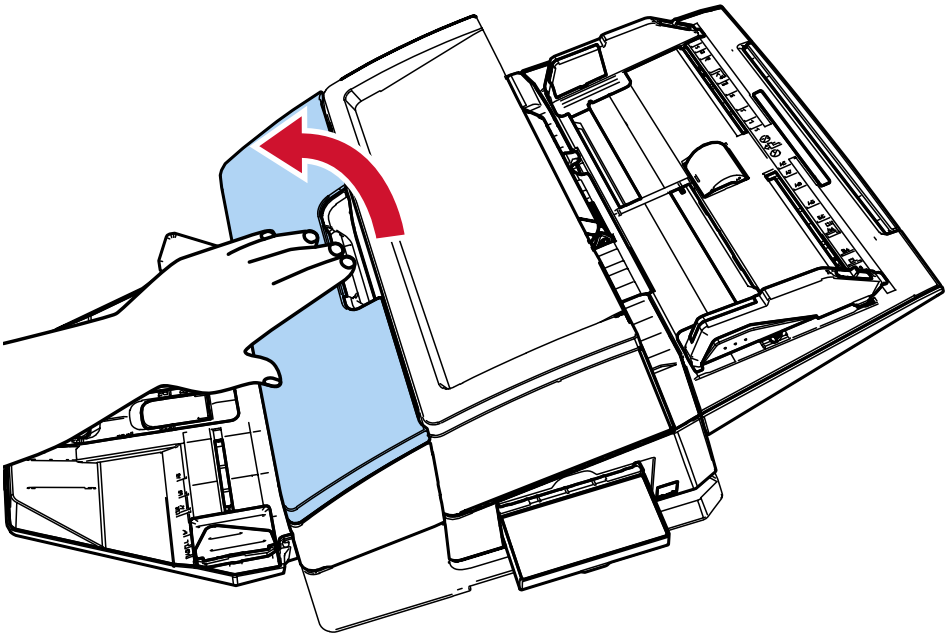

3 Pinch and lower the arms of the print cartridge holder with your fingers as shown below to raise the arms on the other end.

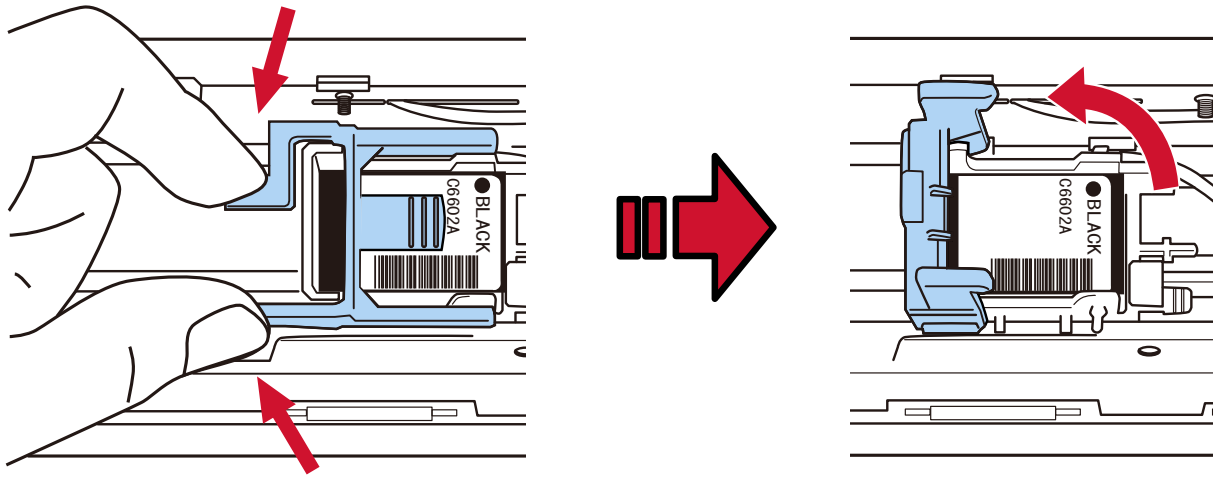

4 Pinch and remove the old print cartridge with your fingers.

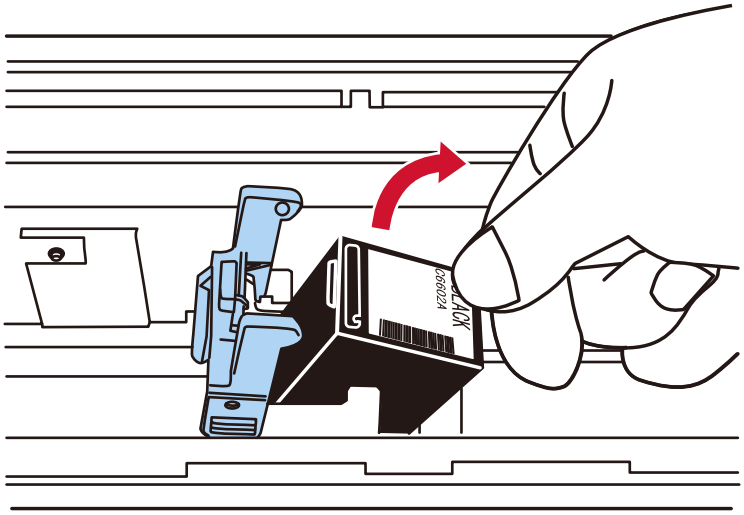

5 Reinstall the new print cartridge.

➡ Refer to steps 5 to 10 in Installing the Print Cartridge (page 18)

ATTENTION

When installing the print cartridge, make sure that you install it in the correct orientation.

6 Confirm that the scanner is connected to the computer, then turn on the scanner.

For details about how to connect the scanner to the computer, refer to the Operator's Guide for your scanner.

7 Reset the ink counter in the following procedure.

ATTENTION

Be sure to reset the ink counter after replacing the print cartridge.

Use Software Operation Panel to reset the ink counter.
For details about Software Operation Panel, refer to the Operator's Guide for your scanner.

a Display the [Software Operation Panel] window.

Windows 10/Windows Server 2016/Windows Server 2019/Windows Server 2022

Click [Start] menu → [fi Series] → [Software Operation Panel].

Windows 11/Windows Server 2025

Click [Start] menu → [All apps] → [fi Series] → [Software Operation Panel].

b Click [Device Setting] from the list, and then click the [Clear] button of [Remaining Ink].

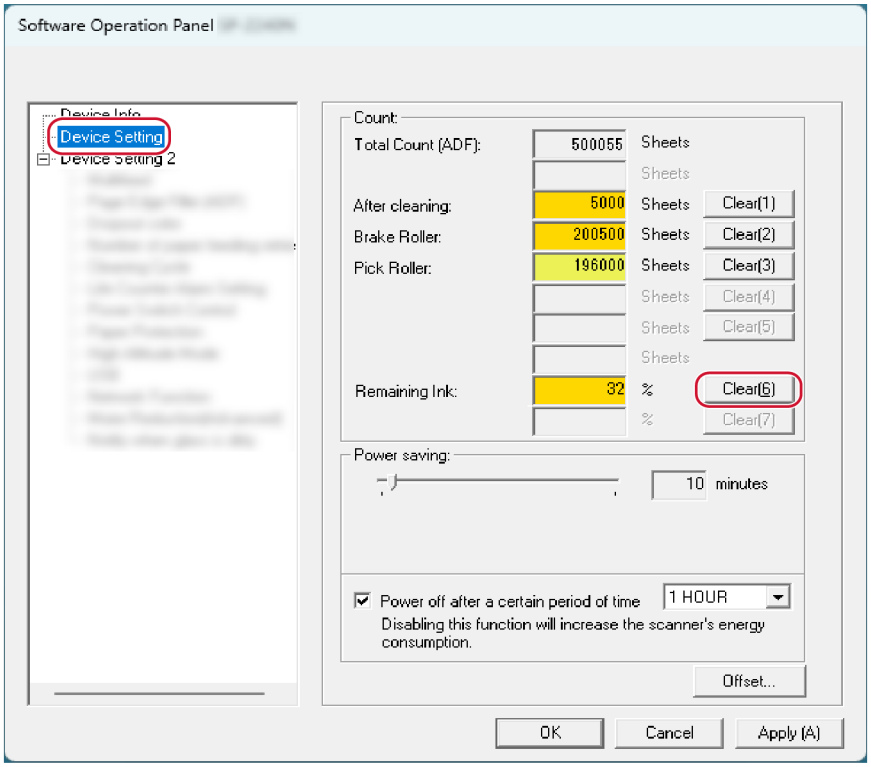

The value of the counter is set to 100.

c Click the [OK] button.

d A message appears asking you whether to apply the changes to Software Operation Panel. Click the [OK] button.

The [Software Operation Panel] window closes, and the ink counter is cleared.

ATTENTION

When you do not use the imprinter for a long time, remove the print cartridge.
Ink will be consumed every time the scanner is powered-on even if printing is not done.

Removing Jammed Documents

When a paper jam occurs, remove the document in the following procedure.

ATTENTION

Do not use force to pull out jammed documents, and be sure to open the print section first, before opening the ADF.

1 **Remove all documents from the ADF paper chute (feeder).**

2 **Open the print section (imprinter cover).**

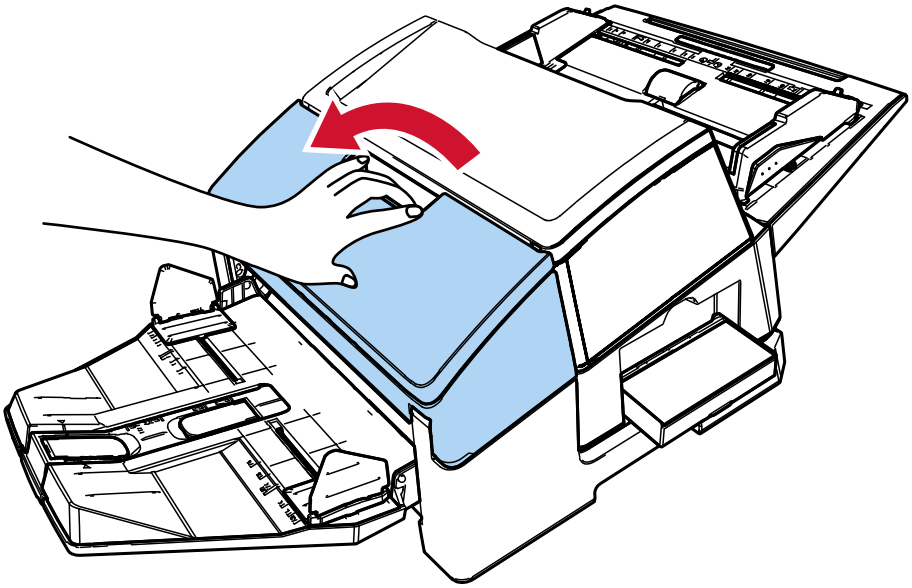

3 **Open the ADF.**

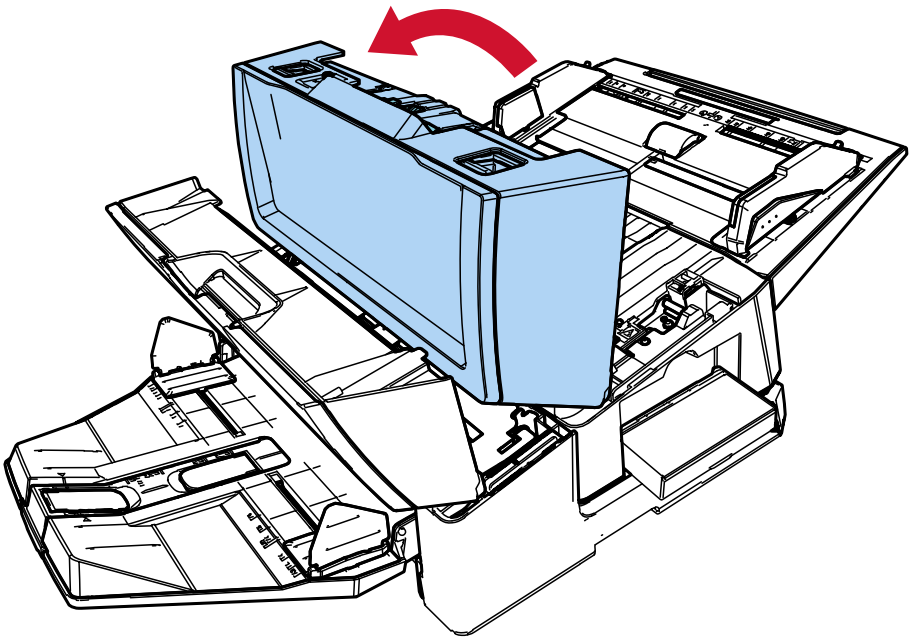

4 **Remove the jammed document.**

5 **Close the ADF.**

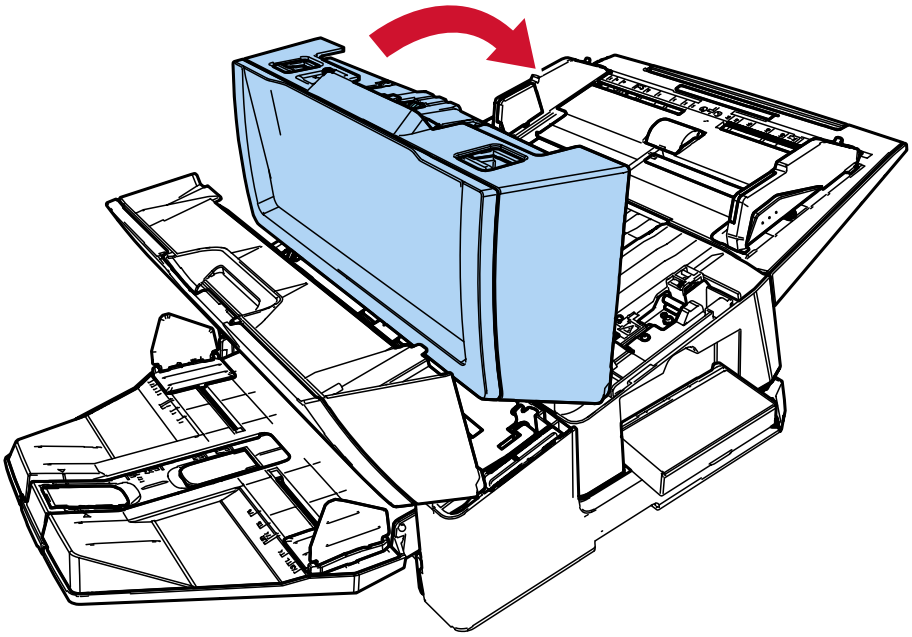

6 **Make sure that the ADF is closed properly and then close the print section (imprinter cover).**

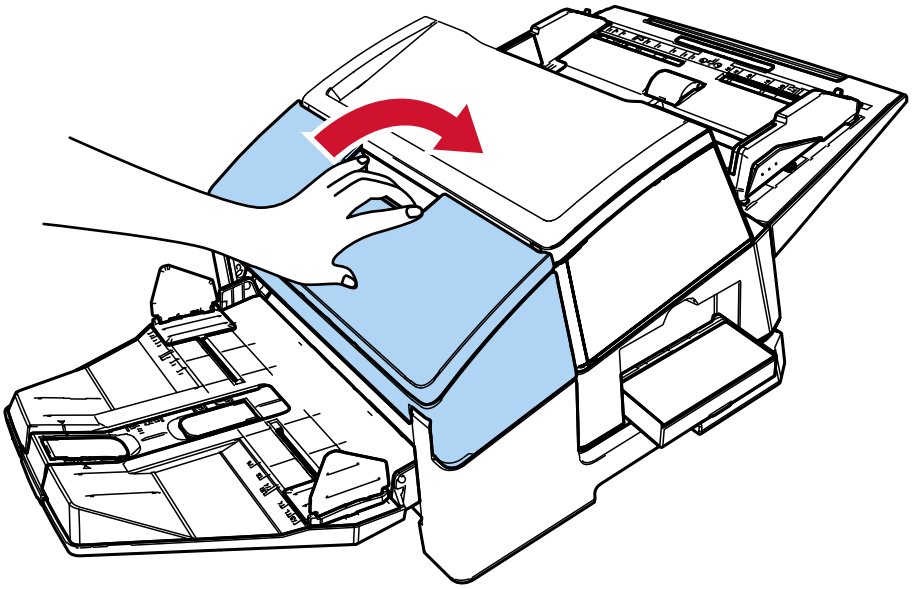

ATTENTION

Be careful not to get your fingers caught.

Cleaning the Print Cartridge

Ink may get on the nozzle plate of the print cartridge.
If the imprinter has not been used for a long time, a clogged nozzle may cause low quality prints.
If your imprinter has these types of trouble, clean the nozzle plate of the print cartridge.

ATTENTION

For cleaning, use a dry lint-free cloth, and gently wipe off the excess ink from the nozzle plate. (Do not use a tissue.)

TIP

If the nozzle is still clogged after cleaning the print cartridge, replace it with a new cartridge.

1. **Turn off the scanner.**
2. **Remove the print cartridge.**

   ➡ Refer to steps 2 to 4 in Replacing the Print Cartridge (page 32)
3. **Wipe off the excess ink on the nozzle plate (B) gently.**

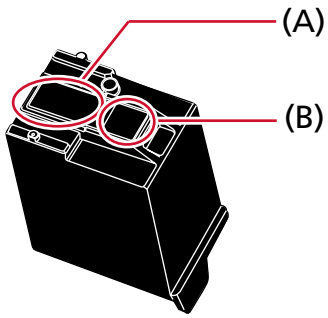

ATTENTION

Be careful not to touch the print head of the print cartridge (the contact part (A) and the nozzle plate (B)) with your hands. Printing may be out of order.

4. **Make sure that the excess ink is removed and then reinstall the print cartridge.**

   ➡ Refer to steps 7 to 10 in Installing the Print Cartridge (page 18)

ATTENTION

When installing the print cartridge, make sure that you install it in the correct orientation.

Cleaning the Imprinter

While you use the imprinter frequently, ink sticks to the print cartridge holder base which makes the paper dirty.
As a part of daily maintenance, clean the print cartridge holder base by following the procedure below.

ATTENTION

When cleaning, use an absorbent cloth or a waste cloth, and gently wipe off the ink on the base. If the ink is dried, gently wipe it with a moistened cloth. (Since the ink is water soluble, it can be cleaned with water.)

1. **Turn off the scanner.**
2. **Remove the print cartridge.**

   ➡ Refer to steps 2 to 4 in Replacing the Print Cartridge (page 32)
3. **Open the print section (imprinter cover).**

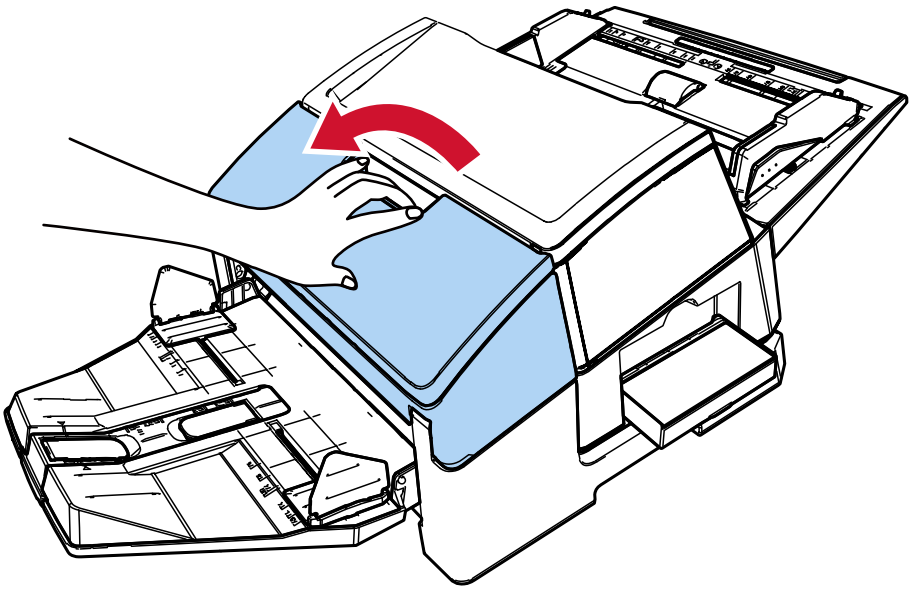

4 **Dab the surface of the base of the print cartridge with a cloth or waste cloth to remove the ink.**

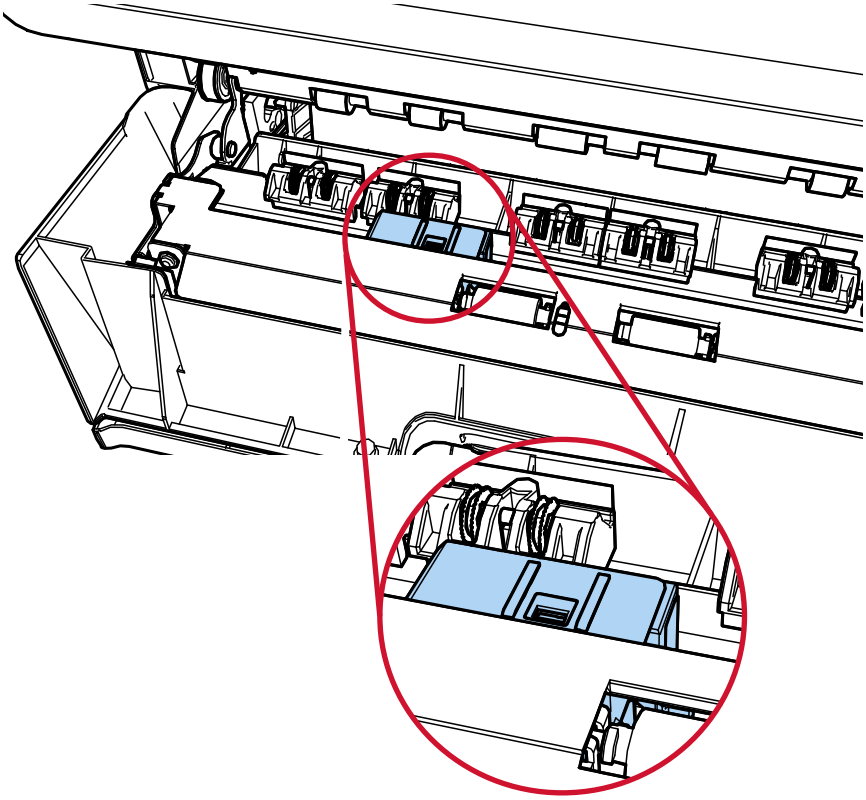

ATTENTION

When cleaning, be careful not to touch the metal wheels located at the print section (imprinter cover).

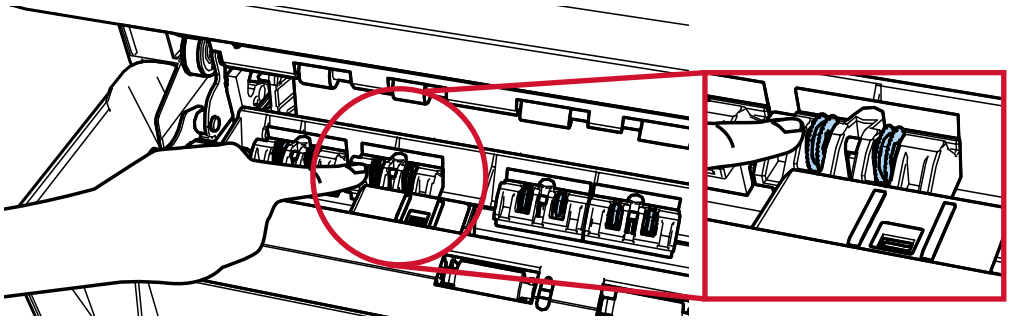

5 Confirm that the ink is removed and then close the print section (imprinter cover).

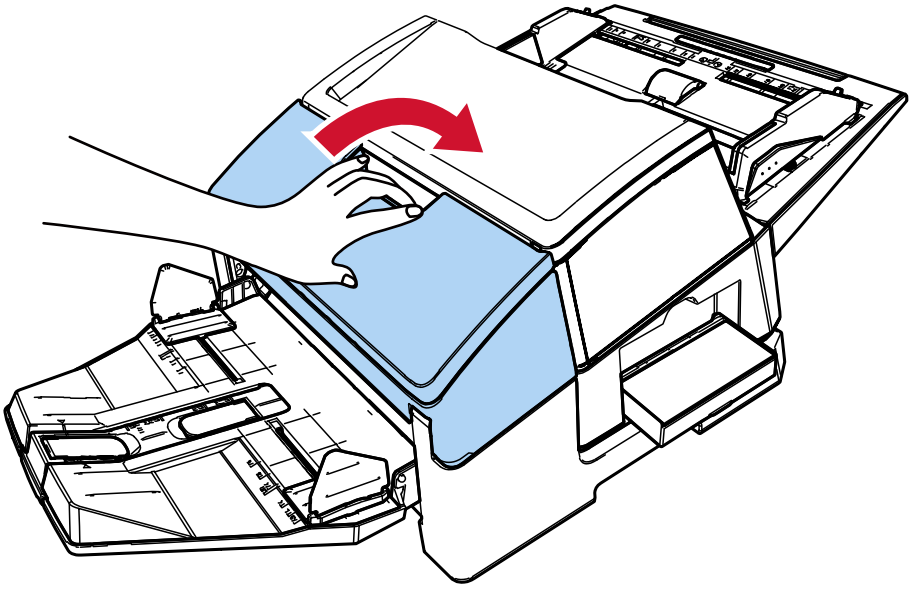

6 Reinstall the print cartridge.

➡ Refer to steps 7 to 10 in Installing the Print Cartridge (page 18)

Cleaning the Rollers

When ink or paper dust is stuck on the imprinter feed roller surfaces, documents may not feed smoothly.
To prevent feed problems, clean the roller surfaces regularly.

ATTENTION

It may take a long time to dry if an excessive amount of Cleaner F1 is used.
Use it in small quantity.
Wipe off the cleaner completely to leave no residue on the cleaned parts.

TIP

The recommended cleaning cycle is every 5,000 sheets.
The actual cleaning cycle may be shorter depending on how often the imprinter is used and the documents.

1 Open the print section (imprinter cover).

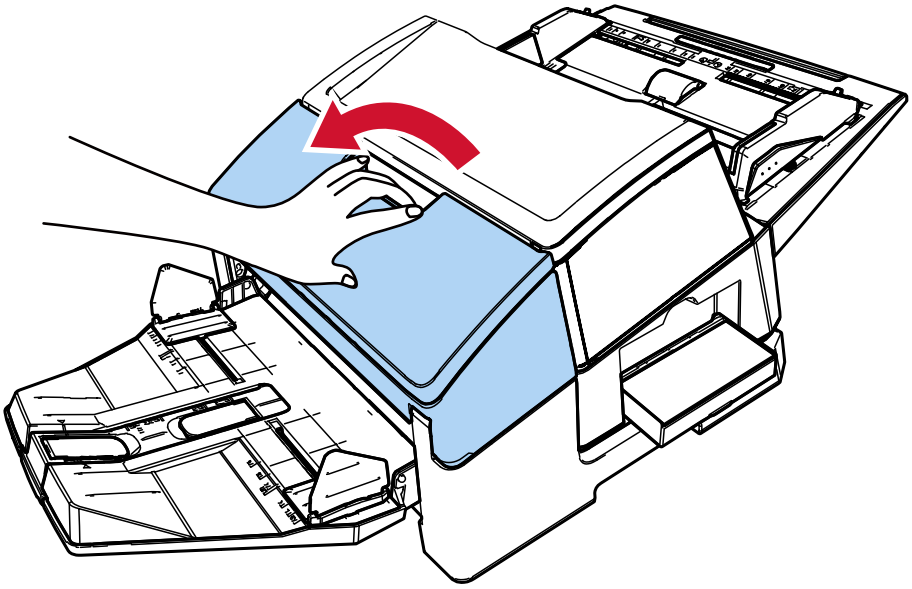

2 Clean the rubber rollers.

Clean the rubber rollers (eight in total) under the feeding section.

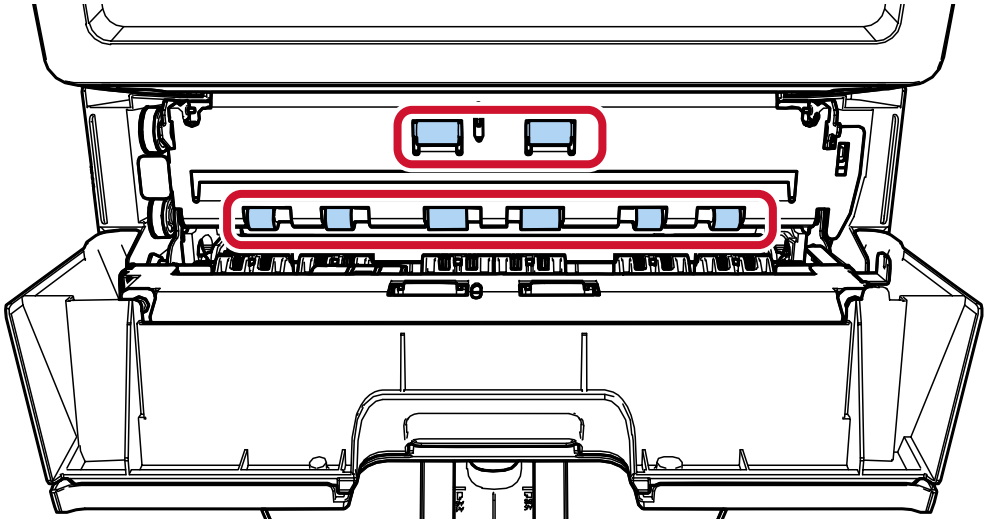

Gently wipe the dirt and dust off the surface of the rollers with a cloth moistened with Cleaner F1.

Clean the entire surface of the rubber rollers as you rotate them manually.

ATTENTION

When cleaning, be careful not to touch the metal wheels located at the print section (imprinter cover).

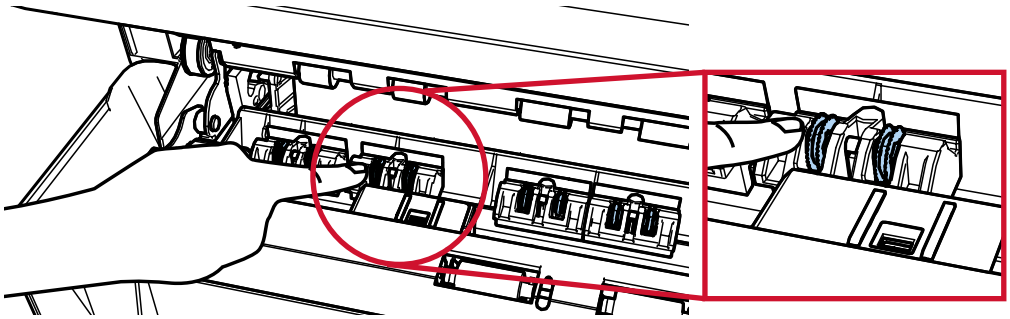

3 Clean the plastic rollers.

Clean the two plastic rollers (black) at the print section (imprinter cover).

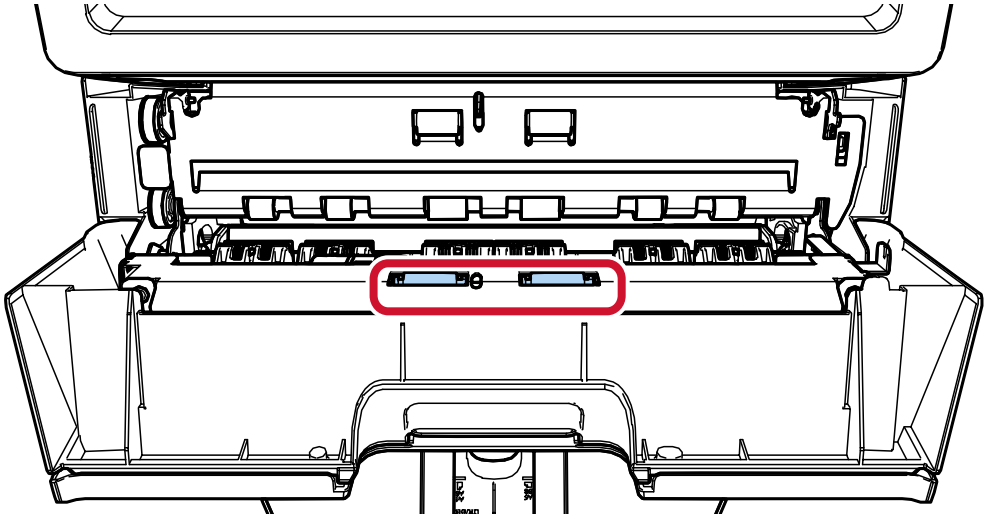

Gently wipe the dirt and dust off the surface of the rollers with a cloth moistened with Cleaner F1.

Clean the entire surface of the plastic rollers as you rotate them manually.

4 Confirm that the ink is removed and then close the print section (imprinter cover).

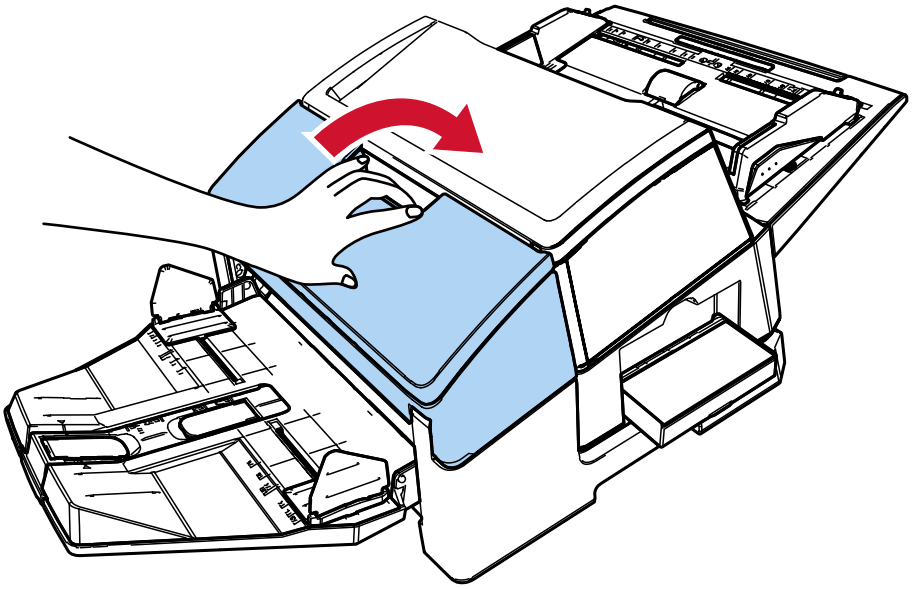

Cleaning Materials

Name	Part No.	Notes
Cleaner F1 	PA03950-0352	Volume: 100 ml
Cleaning Wipe 	PA03950-0419	24 packets (*1)

***1:**Pre-moistened with Cleaner F1.
It can be used instead of moistening a cloth with Cleaner F1.

ATTENTION

In order to use the cleaning materials safely and correctly, read the precautions on each product thoroughly.

For more information about the cleaning materials, contact the distributor/dealer where you purchased this product.

Error Messages

This section explains the imprinter error messages.
Error codes and error messages are displayed on the LCD. Refer to the displayed error codes and error messages for troubleshooting.

ATTENTION

For details about the error messages other than the ones shown below, refer to the Operator's Guide for your scanner.

Error Code	Error Message	Action
J1:5A Error	Paper jam	Paper is jammed in the imprinter. Take the following measures. ● Remove the jammed document from the imprinter. ➡ Removing Jammed Documents (page 35) ● Make sure that the document satisfies the requirements for documents that can be fed into the imprinter. ➡ Specifications (page 48) ● Clean the rollers. ➡ Cleaning the Rollers (page 41)
U5:4A Error (*1)	Imprinter Cover Open	The print section (imprinter cover) was opened during scanning. Remove the document from the ADF, and close the print section (imprinter cover). Confirm that the print section (imprinter cover) is closed properly. To check whether or not it is closed completely, open the print section (imprinter cover) and then close it again. ➡ Removing Jammed Documents (page 35)
U6:B4 Error	Print cartridge not installed	The print cartridge is not installed in the imprinter correctly. Check if the print cartridge is installed correctly. ➡ Installing the Print Cartridge (page 18) If the problem still persists, write down the error code and contact the distributor/dealer where you purchased this product.

Error Code	Error Message	Action
U7:B9 Error	Imprinting area error	An error occurred with the print start position in the imprinter. Adjust the start position and character string for printing so that the print area is inside the document. ➔ Setting the Position in Which to Print (page 25)
A1:B3 Error	Imprinter error (communication timeout)	An error occurred in the imprinter. Take the following measures. ● Check if the print cartridge is installed correctly. ➔ Installing the Print Cartridge (page 18) ● Reconnect the EXT cable. ● Turn the scanner off then back on. If the problem still persists, write down the error code and contact the distributor/dealer where you purchased this product.
A3:B6 Error	Imprinter error (EEPROM)	
A4:B8 Error	Imprinter error (ROM)	
A2:B5 Error	Imprinter error (print head)	An error occurred in the imprinter. Take the following measures. ● Check if the print cartridge is installed correctly. ➔ Installing the Print Cartridge (page 18) ● If you have a new print cartridge, replace the old print cartridge with the new one. ➔ Replacing the Print Cartridge (page 32) ● Reconnect the EXT cable. ● Turn the scanner off then back on. If the problem still persists, write down the error code and contact the distributor/dealer where you purchased this product.
H6:B1 Error	Imprinter system error	An imprinter circuit error occurred. Turn the scanner off then back on. If the problem still persists, write down the error code and contact the distributor/dealer where you purchased this product.

***1:**When you open the imprinter print section (imprinter cover) while the scanner is in standby, only an error message will appear without an error code. Also, note that buttons on the operator panel are disabled while the imprinter print section is open.

Checking the Product Label

This section explains about the product label on the scanner.

The label is located under the base.

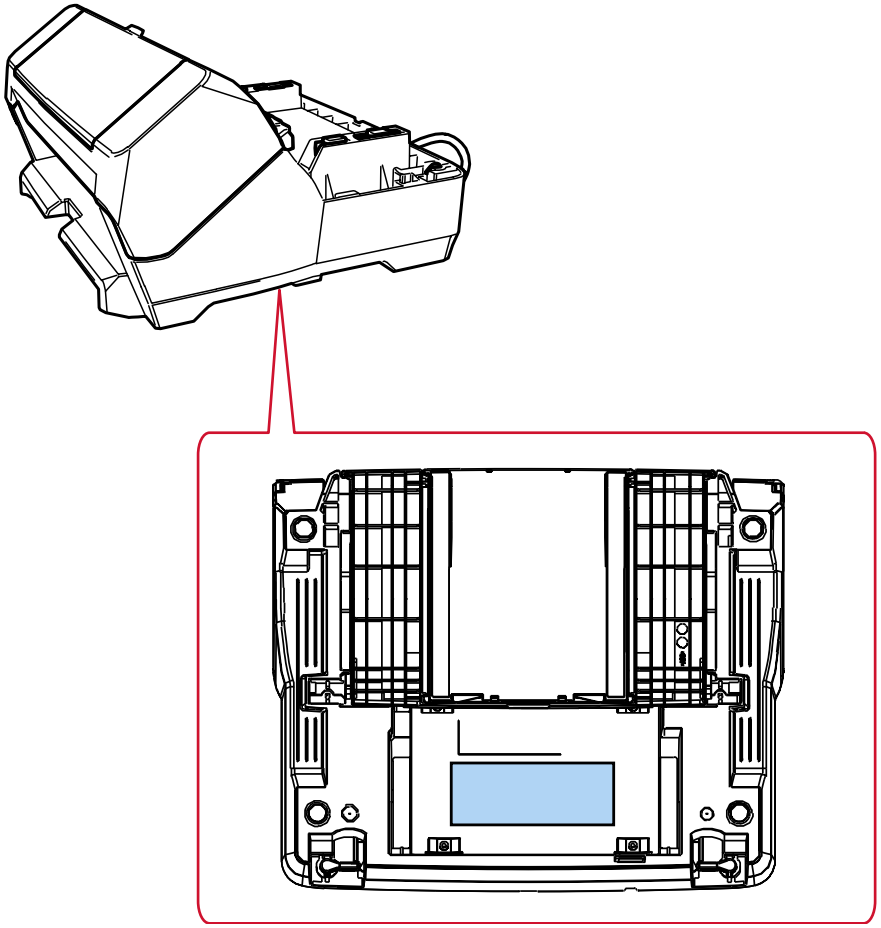

Label (example): Shows the imprinter information.

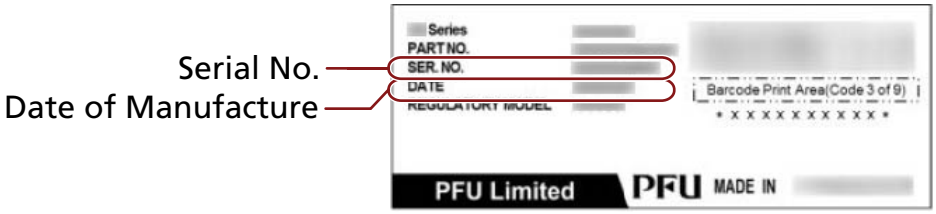

Specifications

Item	Specification
Printing method	Thermal inkjet printing
Printing type	Post-imprinter (printing after image scanning), back-side printing
Printing characters	**Alphabet:** A to Z, a to z **Numeric characters:** 0, 1 to 9 **Symbols:** ! " # $ % & ' ( ) * + , - . / : ; < = > ? @ [¥] ^ _ ` { | } ¯
Maximum number of characters per line	Up to 43 characters
Printing direction	**Regular, Bold:** 0°, 180° (horizontal), 90°, 270° (vertical) **Narrow:** 0°, 180° (horizontal)
Character size	**Regular, Bold:** 2.91 (H) × 2.82 (W) mm (horizontal) 2.82 (H) × 2.91 (W) mm (vertical) **Narrow:** 2.91 (H) × 2.12 (W) mm (horizontal)
Character pitch	**Regular, Bold:** 3.53 mm **Narrow:** 2.54 mm
Font style	Regular, Bold
Character width	Normal, Bold, Narrow
Documents for printing	Documents that can be scanned with the scanner For details, refer to the Operator's Guide for your scanner. Note that the paper size and weight are as follows: ● Minimum size (width × length) 50.8 × 69 mm/2.00 × 2.72 in. ● Maximum size (width × length) 304.8 × 431.8 mm/12.00 × 17.00 in ● Paper weight 52 to 128g/m^2 (14 to 34 lb) **ATTENTION** ● The following types of documents must not be scanned: An imprinting error occurs because ink does not easily dry on or pass through documents.

Item	Specification
	In addition, ink makes the inside of the imprinter dirty, so the cleaning cycle will be shortened. - Documents with glossy surface such as thermal paper, thermal transfer paper, coated paper, and art paper ● Thick plastic documents such as credit cards and a Carrier Sheet cannot be scanned when the imprinter is installed.
Printing area	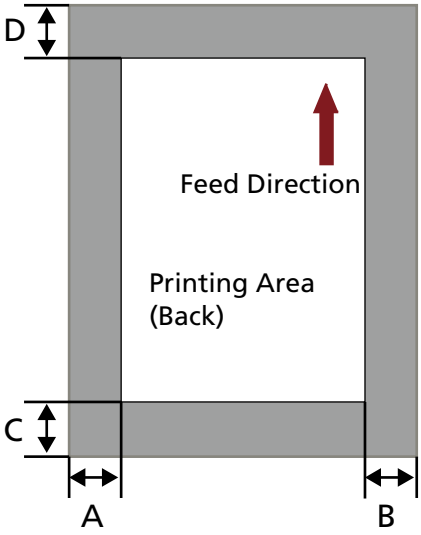 A = 5 mm B = 5 mm C = 5 mm D = 5 mm **ATTENTION** Do not print within 5 mm from the edge of the document.
Accuracy of the position in which to print	**Feed direction:**±4 mm (from the start position)
Dimension	**Without the scanner:**360 (W) × 435 (D) × 228 (H) mm/14.17 (W) × 17.13 (D) × 8.98 (H) in. **With the scanner** 360 (W) × 435 (D) × 264 (H) mm/14.17 (W) × 17.13 (D) × 10.39 (H) in. The depth indicates the size of the scanner without the EXT cable, the ADF paper chute (feeder), and the stacker.
Weight	4.2 kg (9.26 lb)
Ambient condition	**Temperature:**10 to 35℃/50 to 95 °F

Item	Specification
	Humidity: 20 to 80%
Consumables	Print cartridge (PART No.: CA00050-0262) **The number of printable characters:** 4,000,000 characters (The printable number of characters differs depending on the characters to be printed.) **Suggested replacement cycle:** 4,000,000 characters or half a year from the time the package is opened (A print cartridge has a specific expiration date, and the expiration period differs whether the package is opened or not. Start using the print cartridge before the expiration date that is written on the package.)

Contact for Inquiries

- **Contact for Inquiries**

  Refer to the contact list on the following web page:
  https://www.pfu.ricoh.com/global/scanners/contacts/

  - fi Series image scanners
    For other inquiries regarding the scanner, refer to the following web page:
    https://www.pfu.ricoh.com/global/scanners/fi/support/index.html
    If the solution to your problem cannot be found on the above web page, refer to the contact information for your distributor/dealer on the following web page:
    https://www.pfu.ricoh.com/global/scanners/inquiry.html

- **Contact for Purchasing Consumables or Cleaning Materials**

  https://www.pfu.ricoh.com/global/scanners/contacts/